SAMBO

CONTENTS

Spiral Bevel Gear Actuators >>>

The World's Highest Quality!

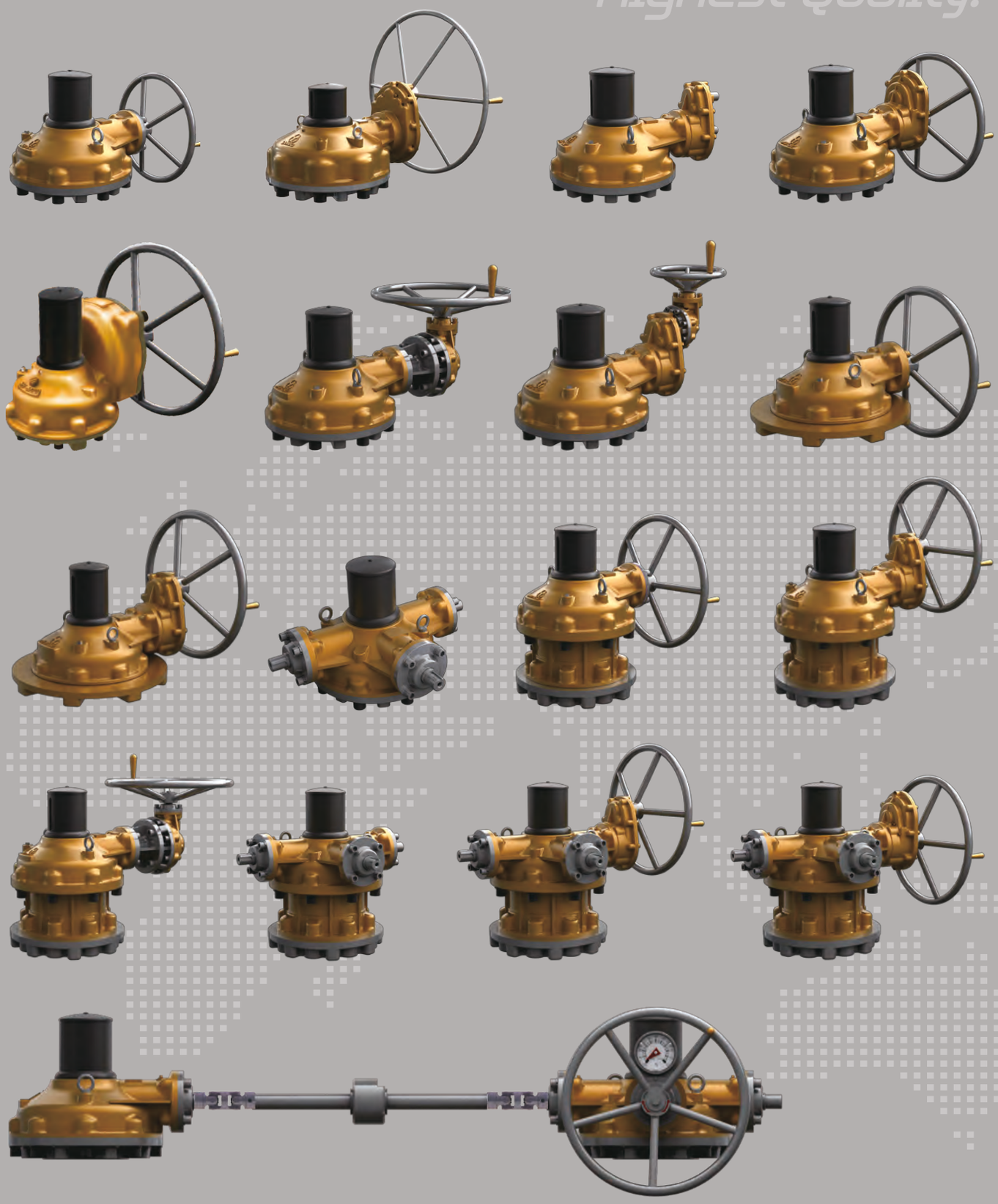

Size and component specification in this catalgue are subject to change without prior notice for quality improvement.

Global Leader

SAMBO

GEAR ACTUATORS for Industrial Valves

Spur Gear Actuators >>>

Worm Gear Actuators >>>

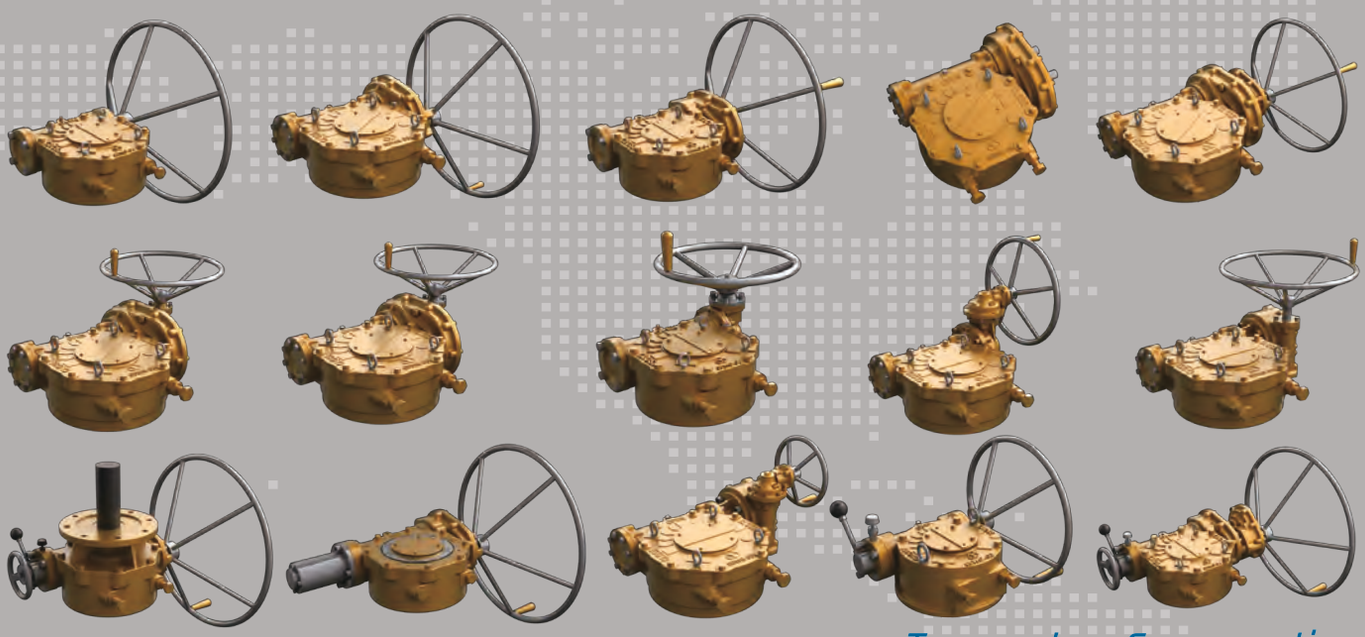

Planetary Gear Reducer

Torque Limiter

Temperature Compensating Spring-loaded Stem Nut

SE Series Quarter-Turn

Subsea Gear Box

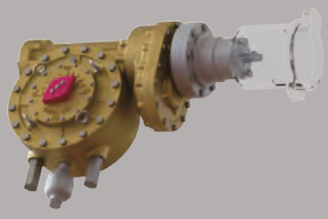

Air Cylinder

Size and component specification in this catalogue are subject to change without prior notice for quality improvement.

Spiral Bevel Gear Actuators

① Spiral Pinion and Spiral Bevel Gear

Pinion gear is 1045 heat treated steel. Bevel Gear is 1045 steel. Both gears are precision cut.

② O-ring

Units are completely O-ring sealed, suitable for temporary submergence to meet IP67 Class.

③ Spherical Roller Bearing

This input Bevel pinion is fully supported on deep groove ball bearings to provide excellent radial support.

④ Gaskets

The Base & end cap is sealed by a Non-asbestos Gasket to prevent any leakage and is waterproof.

⑤ Thrust ball or Self-Aligning Thrust Roller Bearing

Provides anti-friction capacity and are high load type.

Size and component specitication in this catalogue are subject to change without prior notice for quality improvement.
* Mark has been changed and updated.

Global Leader
SAMBO
SPIRAL BEVEL GEAR ACTUATORS

The World's Highest Quality!

Grease ZENITH EPSB 2 >>>

Each unit has a Alumite Grease type fitting and a grease plug for adding lubricant.

The SB-V Series of Spiral Bevel Gear ranges up to 75,000Nm (55,317ft-lbf) Torque and Thrust capacities up to 7,300KN (2,585,300 lbf)

Stem capacities are up to 230mm (9.05inch).
A high Load design, type SB-VH is also available ranging up to 142,000Nm (104,734ft-lbf).
Thrust capacities up to 11,500KN (2,585,300lbf) stem capacities are up to 270mm (10.63inch).

⑥ Dual Locking Nuts

This design incorporates dual locking nuts which provide a jam Effect for positive locking.
No set screw or pinning is required.

⑦ Stem Nut

A unique top Entry Replaceable stem Nut.
After long years of service can be easily replaced without removing Gear from valve.
Material is high tensile brass providing both corrosion and abrasion resistance.

⑧ Drive Sleeve

Also Ductile Iron, Class 65-45-12. supports both axial and radial loads.

⑨ Housing and Base

All external castings are Ductile Iron. Class 65-45-12, Tensile Strength of 65,000 psi.
This provides high strength and excellent impact resistance.

Size and component specification in this catalogue are subject to change without prior notice for quality improvement.
* Mark has been changed and updated.

Spiral Bevel Gear Actuator Assembly

STANDARD TYPE - A

Thrust & Torque Horizontal Input

SAMBO
The World's Highest Quality!

Part List & Material >>>

	NO	DESCRIPTION	MATERIAL			REMARK
			NAME	JIS	ASTM	
STANDARD	1	Housing	Ductile Iron	FCD-450	A536-65-45-12	NOTE.1
	2	Base	Ductile Iron	FCD-450	A536-65-45-12	NOTE.1
	3	Spiral Bevel Gear	Carbon Steel	S45C	A576-1045	
	4	Spiral Pinion	Carbon Steel	S45C	A576-1045	NOTE.2
	5	Drive Sleeve	Ductile Iron	FCD-450	A536-65-45-12	NOTE.1
	6	Dual Lock Nuts	Carbon Steel	S45C	A576-1045	
	7	End Cap	Ductile Iron	FCD-450	A536-65-45-12	NOTE.1
	8	Wrench Bolt(S/W)	Alloy Steel	SCM435	A322-4135	
	9	Wrench Bolt(S/W)	Alloy Steel	SCM435	A322-4135	
	10	Radial Ball Bearing	Special Steel	SUJ2	A295-52100	
	11	Spherical Roller Bearing	Special Steel	SUJ2	A295-52100	
	12	Thrust Bearing	Special Steel	SUJ2	A295-52100	
	13	Grease Plug	Steel + Galvanizing			
	14	O-Ring	Silicon			NOTE.4
	15	O-Ring	Silicon			NOTE.4
	16	Collar	Steel Pipe	SGP	A53	
	17	Bearing Washer	Steel			SNAP RING
	18	Bearing Nut	Steel			SNAP RING
	19	Grease Fitting	Steel + Galvanizing			
	20	Set Screw	Stainless Steel			
	21	End Cap Gasket	Non-Asbestos			VALQUA 6601
	22	Base Gasket	Non-Asbestos			VALQUA 6601
	23	Eye Bolt	Steel + Galvanizing			
OPTION	OP-01.	Stem Nut	Bronze	HBsC4	B505-C86300	NOTE. 3
	OP-02.	Hand Wheel	Steel Pipe	SGP	A53	HANDLE PART NOTE. 5
	OP-03.	Key	Carbon Steel	S45C	A576-1045	
	OP-04.	Name Plate	Stainless Steel			
	OP-05.	Washer	Stainless Steel			
	OP-06.	HEX. Bolt (S/W)	Stainless Steel			
	OP-07.	Stem Cover	Steel Pipe	SGP	A53	STEM COVER NOTE.6
	OP-08.	Indicate Bolt	Steel + Galvanizing			
	OP-09.	HEX. Nut	Steel + Galvanizing			
	OP-10.	Indicator	Plastic			

Material Detail : Option and Material Changes >>>

1. All castings are Ductile Iron, FCD-450 (ASTM Class 65-45-12)
2. In case of option for special request, it can be worked Nickel coating, high tensile stainless.
3. Also, the material can be changed as ALBC3(Aluminium Bronze), steel(A576-1045), A439 Gr D2C (Austenitic ductile iron casting), etc.
4. O-Ring Seal & Lubricant : Standard is Silicon & Buna "N", temperature range -20˚C to +120˚C (-4˚F to +248˚F).
   Standard lubricant is Zenith EPSB 2, temperature Range -20˚C to +200˚C (-4˚F to +392˚F).
   Other option are : High Temperature Viton O-Ring Grade V75, Temperature Range -30˚C to +200˚C (-22˚F to +392˚F)
   Lubricant - Zenith SYN WS2 Temperature Range -30˚C~400˚C (-13˚F~752˚F)
   Low Temperature Silicon O-ring, Temperature Range -60˚C to +150˚C (-76˚F to +302˚F)
   Lubricant - Zenith SBLT600, Temperature Range -60˚C~120˚C (-76˚F~248˚F)
5. SAMBO offers a wide variety of Handwheels, Chainwheels, Input Shaft, Locking Devices, etc.
6. SAMBO offers a wide variety of stem cover, stainless steel, polycarbonate.
   Paint : Unless specified, units are supplied with vp134 Red epoxy primer. SAMBO can provide finish coating upon request.

Size and component specification in this catalogue are subject to change without prior notice for quality improvement.
* Mark has been changed and updated.

Spiral Bevel Gear Actuator Assembly

STANDARD TYPE - A

Thrust & Torque Horizontal Input with Single Reduction Gear Attachment

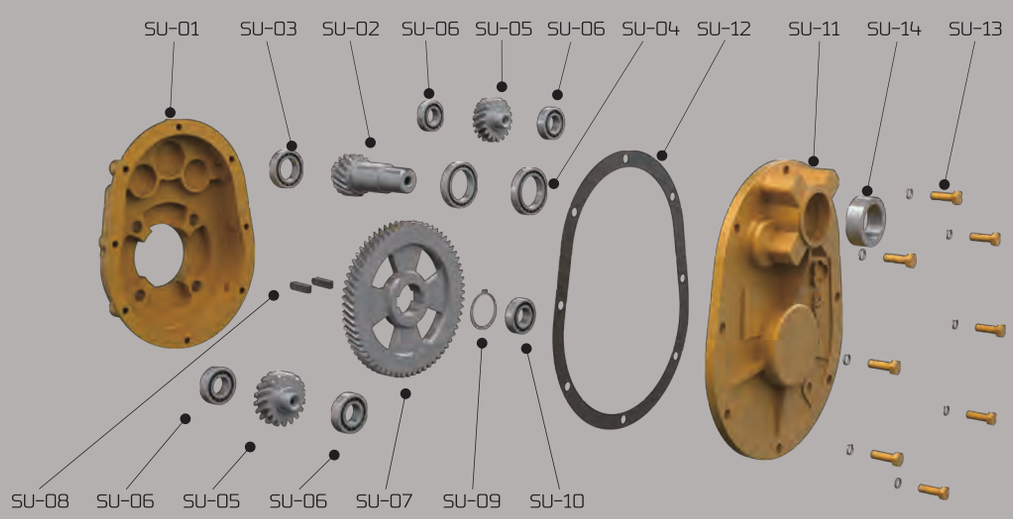

Part List & Material >>>

NO	DESCRIPTION	MATERIAL			REMARK
		NAME	JIS	ASTM	
1	Housing	Ductile Iron	FCD-450	A536-65-45-12	
2	Base	Ductile Iron	FCD-450	A536-65-45-12	
3	Spiral Bevel Gear	Carbon Steel	S45C	A576-1045	
4	Spiral Pinion	Carbon Steel	S45C	A576-1045	
5	Drive Sleeve	Ductile Iron	FCD-450	A536-65-45-12	
6	Dual Lock Nuts	Carbon Steel	S45C	A576-1045	
7	End Cap	Ductile Iron	FCD-450	A536-65-45-12	
8	Wrench Bolt(S/W)	Alloy Steel	SCM435	A322-4135	
9	Wrench Bolt(S/W)	Alloy Steel	SCM435	A322-4135	
10	Radial Ball Bearing	Special Steel	SUJ2	A295-52100	
11	Spherical Roller Bearing	Special Steel	SUJ2	A295-52100	
12	Thrust Bearing	Special Steel	SUJ2	A295-52100	
13	Grease Plug	Steel + Galvanizing			
14	O-Ring	Silicon			
15	O-Ring	Silicon			
16	Collar	Steel Pipe	SGP	A53	
17	Bearing Washer	Steel			
18	Bearing Nut	Steel			
19	Grease Fitting	Steel + Galvanizing			
20	Set Screw	Stainless Stell			
21	End Cap Gasket	Non-Asbestos			VALQUA 6601
22	Base Gasket	Non-Asbestos			VALQUA 6601
23	Eye Bolt	Steel + Galvanizing			

NO	DESCRIPTION	MATERIAL			REMARK
		NAME	JIS	ASTM	
SU-01	Support Housing	Ductile Iron	FCD-450	A536-65-45-12	
SU-02	Helical Pinion	Carbon Steel	S45C	A576-1045	
SU-03	Radial Ball Bearing	Special Steel	SUJ2	A295-52100	
SU-04	Radial Ball Bearing	Special Steel	SUJ2	A295-52100	
SU-05	Idle Gear	Carbon Steel	S45C	A576-1045	
SU-06	Radial Ball Bearing	Speciial Steel	SUJ2	A295-52100	
SU-07	Helical Gear	Carbon Steel	S45C	A576-1045	
SU-08	Key(1R)	Carbon Steel	S45C	A576-1045	
SU-09	Snap ring	Steel			
SU-10	Radial Ball Bearing	Special Steel	SUJ2	A295-52100	
SU-11	Support Cover	Ductile Iron	FCD-450	A536-65-45-12	
SU-12	S-Cover Gasket	Nonasbestos			VALQUA6601
SU-13	Hex.Bolt(S/W)	Alloy Steel	SCM435	A322-4135	
SU-14	Oil-Seal	Buna N	NBR		
OP-01	Stem Nut	Bronze	HBsC4	B505-C86300	
OP-02	Hand Wheel	Steel Pipe	SGP	A53	OPTION HANDLE PART
OP-03	Key(1R)	Carbon Steel	S45C	A576-1045	
OP-04	Name Plate	Stainless Steel			
OP-05	Washer	Stainless Steel			
OP-06	HEX. Bolt (S/W)	Stainless Steel			
OP-07	Stem Cover	Steel Pipe	SGP	A53	OPTION STEM COVER
OP-08	Indicate Bolt	Steel + Galvanizing			
OP-09	HEX. Nut	Steel + Galvanizing			
OP-10	Indicator	Plastic			

Size and component specification in this catalogue are subject to change without prior notice for quality improvement.
* Mark has been changed and updated.

STANDARD TYPE - A

High Load Thrust & Torque Horizontal Input

Part List & Material >>>

NO	DESCRIPTION	MATERIAL			REMARK
		NAME	JIS	ASTM	
1	Housing	Ductile Iron	FCD–450	A536–65–45–12	
2	Thrust Base	Ductile Iron	FCD–450	A536–65–45–12	
3	Spiral Bevel Gear	Carbon Steel	S45C	A576–1045	
4	Spiral Pinion	Carbon Steel	S45C	A576–1045	
5	Drive Sleeve	Ductile Iron	FCD–450	A536–65–45–12	
6	Grease Plug	Steel + Galvanizing			
7	End Cap	Ductile Iron	FCD–450	A536–65–45–12	
8	Wrench Bolt(S/W)	Alloy Steel	SCM435	A322–4135	
9	Wrench Bolt	Alloy Steel	SCM435	A322–4135	
10	Radial Ball Bearing	Special Steel	SUJ2	A295–52100	
11	Spherical Roller Bearing	Special Steel	SUJ2	A295–52100	
12	Thrust all Bearing	Special Steel	SUJ2	A295–52100	
13	Grease Plug	Steel + Galvanizing			
14	O–Ring	Silicon			
15	O–Ring	Silicon			
16	Collar	Steel Pipe	SGP	A53	
17	Bearing Washer	Steel			
18	Bearing Nut	Steel			
19	Grease Fitting	Steel + Galvanizing			

NO	DESCRIPTION	MATERIAL			REMARK
		NAME	JIS	ASTM	
20	Set Screw	Stainless Steel			
21	End Cap Gasket	Non–Asbestops			VALQUA 6601
22	Base Gasket	Non–Asbestops			VALQUA 6601
23	Eye Bolt	Steel + Galvanizing			
24	Thrust Housing	Ductile Iron	FCD–450	A536–65–45–12	
25	Thrust Gasket	Non–Asbestos			VALQUA 6601
26	Wrench Bolt (S/W)	Alloy Steel	SCM435	A322–4135	
27	SR. Thrust Bearing	Special Steel	SUJ2	A295–52100	
OP–01	Stem Nut	Bronze	HBsC4	B505–C86300	
OP–02	Hand Wheel	Steel Pipe	SGP	A53	OPTION HANDLE PART
OP–03	Key(1R)	Carbon Steel	S45C	A576–1045	
OP–04	Name Plate	Stainless Steel			
OP–05	Washer	Stainless Steel			
OP–06	HEX. Bolt (S/W)	Stainless Steel			
OP–07	Stem Cover	Steel Pipe	SGP	A53	OPTION STEM COVER
OP–08	Indicate Bolt	Steel + Galvanizing			
OP–09	HEX. Nut	Steel + Galvanizing			
OP–10	Indicator	Plastic			

Size and component specification in this catalogue are subject to change without prior notice for quality improvement.
* Mark has been changed and updated.

SAMBO

INDEX

Etc.

Hand Wheel Type & Chain Wheel Type 018 · 019
MOV Type & Flange Dimensions 020 · 021
Fix Type & Hammer Blow Type 022
Etc. 023

A

Standard Type A - Thrust & Torque
Horizontal Input 024 · 025
Standard Type A - Thrust & Torque
Horizontal Input 026 · 027
Standard Type A - Thrust & Torque
Horizontal Input 028 · 029
Standard Type A - Thrust & Torque
Horizontal Input with Single Reduction Gear Attachment 030 · 031
Standard Type A - Thrust & Torque (Twin Shaft)
Horizontal Input with Single Reduction Gear Attachment 032 · 033
Standard Type A - Thrust & Torque
Horizontal Input with Double Reduction Gear Attachment 034 · 035
Standard Type A - Thrust & Torque (Twin Shaft)
Horizontal Input with Double Reduction Gear Attachment 036 · 037

B

Standard Type B - Thrust & Torque
Horizontal Input with Single Reduction Gear Attachment 038 · 039
Standard Type B - Thrust & Torque
Horizontal Input with Double Reduction Gear Attachment 040 · 041

C

Standard Type C - Torque only Lug Drive
Horizontal Input 042 · 043
Standard Type C - Torque only Lug Drive
Horizontal Input with Single Reduction Gear Attachment 044 · 045

D

Standard Type D - Multiple Input Shaft - Thrust & Torque
Horizontal Input 046 · 047
Standard Type D - Multiple Input Shaft - Thrust & Torque
Horizontal Input with Single Reduction Gear Attachment 048 · 049
Standard Type D - Multiple Input Shaft - Thrust & Torque
Horizontal Input with Double Reduction Gear Attachment 050 · 051

E

Standard Type E - High Load Thrust & Torque
Horizontal Input 052 · 053
Standard Type E - High Load Thrust & Torque
Horizontal Input with Single Reduction Gear Attachment 054 · 055
Standard Type E - High Load Thrust & Torque (Twin Shaft)
Horizontal Input with Single Reduction Gear Attachment 056 · 057
Standard Type E - High Load Thrust & Torque
Horizontal Input with Double Reduction Gear Attachment 058 · 059
Standard Type E - High Load Thrust & Torque (Twin Shaft)
Horizontal Input with Double Reduction Gear Attachment 060 · 061
Standard Type E - High Load Thrust & Torque
Vertical Input with Single Reduction Gear Attachment 062 · 063

F

Standard Type F - Multiple Input Shaft : High Load Thrust & Torque
Horizontal Input 064 · 065
Standard Type F - Multiple Input Shaft : High Load Thrust & Torque
Horizontal Input with Single Reduction Gear Attachment 066 · 067
Standard Type F - Multiple Input Shaft : High Load Thrust & Torque
Horizontal Input with Double Reduction Gear Attachment 068 · 069
Standard Type F - Multiple Input Shaft : High Load Thrust & Torque
Vertical Input with Single Reduction Gear Attachment 070 · 071

Size and component specification in this catalogue are subject to change without prior notice for quality improvement.
* Mark has been changed and updated.

PRODUCTS

Global Leader
SAMBO
GEAR ACTUATORS for Industrial Valves

The World's Highest Quality!

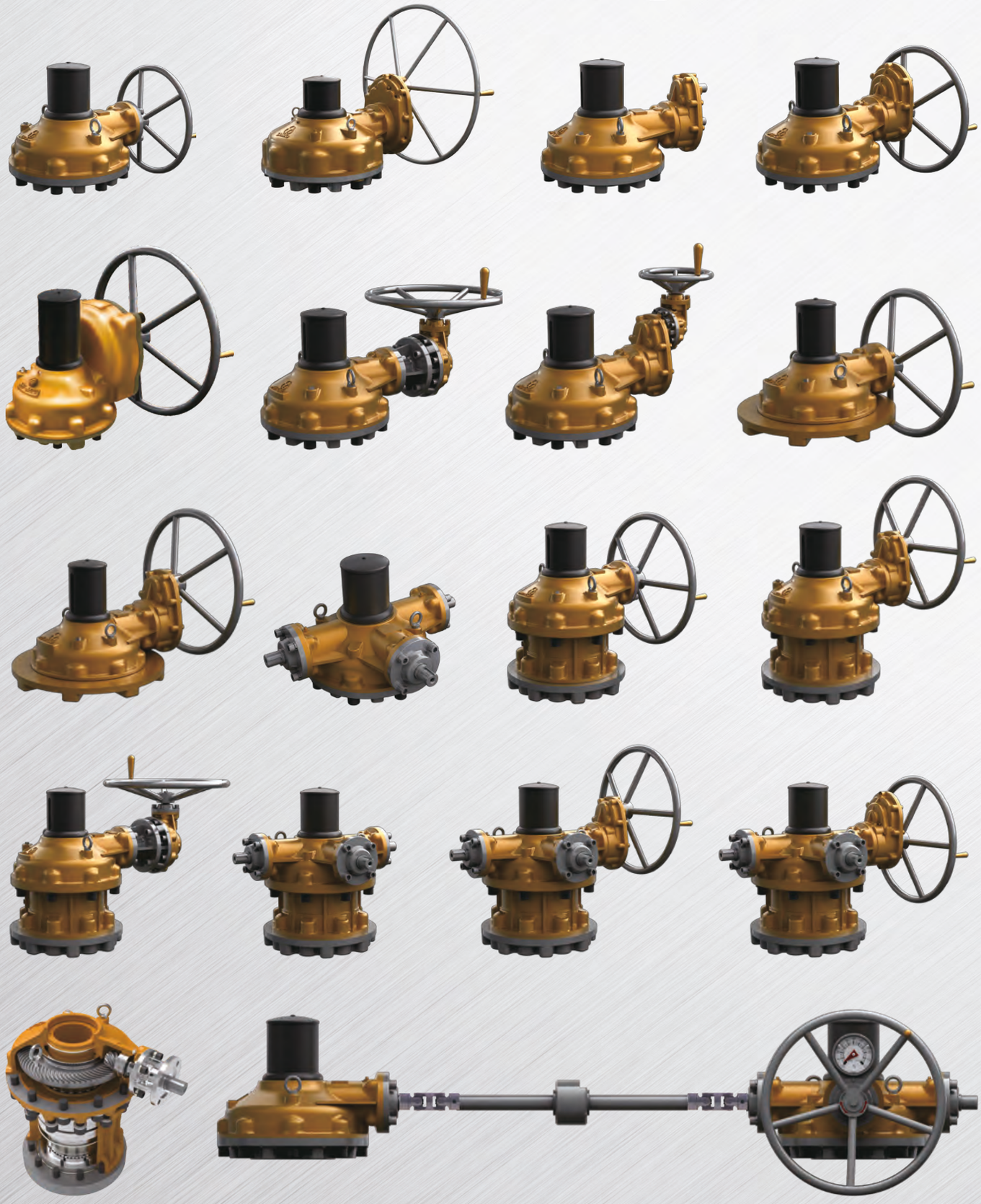

Size and component specification in this catalogue are subject to change without prior notice for quality improvement.
* Mark has been changed and updated.

Hand Wheel Type

Standard Handwheel : Gate Valve >>>

UNIT : mm

SIZE / MODEL	ΦO.D	ΦD	ΦD&KEY	L	L1	ARM Q'TY
BH–250	250	60	Φ26 (8X7)	35	70	4EA
BH–300	300					
BH–400	400	70	Φ32 (10X8)	35	90	5EA
BH–500	500					
BH–630	630				110	
BH–710	710					
BH–800	800	80	Φ38 (12X8)	45	130	6EA
BH–900	900					
BH–1000	1000	90	Φ50 (16X10)	59		

If there is no request from customers, we will make handwheel as per the above table.
As option, the material can be changed and Handwheel size can be suitable for all models.

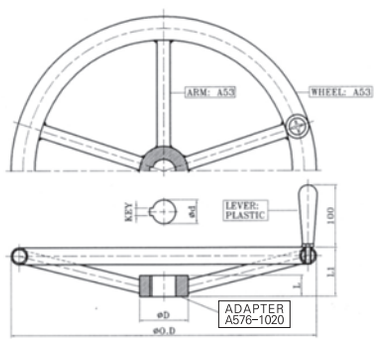

SOLID HANDWHEEL >>>

UNIT : mm

SIZE / MODEL	ΦO.D	ΦD	ΦD&KEY	L	L1	ARM Q'TY
BSH–250	250	60	Φ26 (8X7)	35	70	4EA
BSH–300	300					
BSH–400	400	70	Φ32 (10X8)	35	90	5EA
BSH–500	500					
BSH–630	630				110	
BSH–710	710					
BSH–800	800	80	Φ38 (12X8)	45	130	6EA
BSH–900	900					
BSH–1000	1000	90	Φ50 (16X10)	59		

If there is no request from customers, we will make handwheel as per the above table.
As option, the material can be changed and Handwheel size can be suitable for all models.

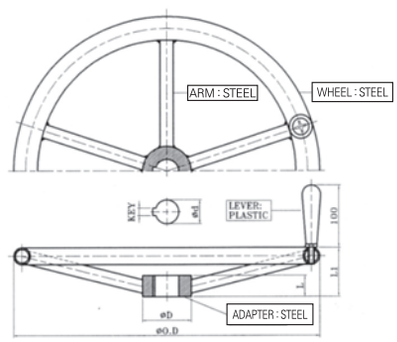

Round Bar Handwheel : Globe Valve >>>

UNIT : mm

SIZE / MODEL	ΦO.D	ΦD	ΦD&KEY	L	L1	ARM Q'TY
BRH–250	250	80	Φ26 (8X7)	35	55	4EA
BRH–300	300					
BRH–400	400	100	Φ32 (10X8)	35	60	5EA
BRH–500	500					
BRH–630	630				65	
BRH–710	710					
BRH–800	800	120	Φ38 (12X8)	45	70	6EA
BRH–900	900					
BRH–1000	1000	140	Φ50 (16X10)	59		

All material of round bar handwheel are made by carbon steel and it is used for required momentary impact to be suitable glove valve.

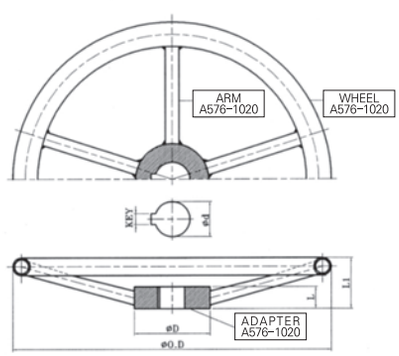

2" SQUARE NUT Handwheel >>>

UNIT : mm

SIZE / MODEL	ΦO.D	ΦD	ΦD&KEY	L	L1	ARM Q'TY
BDNH–250	250	90	Φ26 (8X7)	35	70	4EA
BDNH–300	300					
BDNH–400	400		Φ32 (10X8)		90	5EA
BDNH–500	500					
BDNH–630	630				110	
BDNH–710	710					
BDNH–800	800		Φ38 (12X8)		130	6EA
BDNH–900	900					
BDNH–1000	1000		Φ50 (16X10)	70		

This Handwheel is the type using air impact wrench and it can be made properly according to customer' s request.

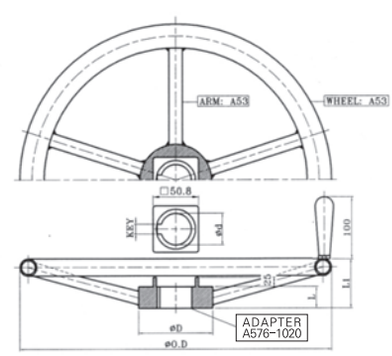

Size and component specification in this catalogue are subject to change without prior notice for quality improvement.
* Mark has been changed and updated.

Chain Wheel Type

Spiral Bevel Standard >>>

UNIT : mm

SIZE / MODEL	A	B	ΦD & KEY
CH-200	200	43	Φ16 (6X6) Φ21 (6X6)
CH-250	250		
CH-300	300	43.5	Φ26 (8X7) Φ32 (10X8)
CH-350	350		
CH-400	400	50	Φ38 (12X8)
CH-450	450		
CH-500	500		
CH-550	550		
CH-600	600		
CH-700	700	51.5	Φ38 (12X8) Φ50 (16X10)
CH-800	800	53	

Gear Type >>>

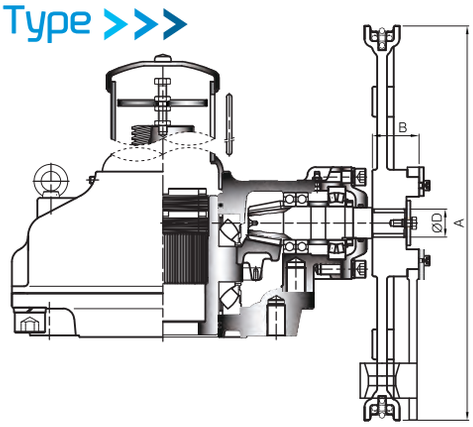

Hammer Type >>>

Chainwheel has 2 types

- First, hammer type which is joined with handwheel.
- Second, gear type which is adhered to gear directly.
- material : sprocket rim (FCD450), guide arm (A576-1045), chain (steel+zn)

Global Leader
SAMBO
SPIRAL BEVEL GEAR ACTUATORS

The World's Highest Quality!

Handwheel Selection Chart >>>

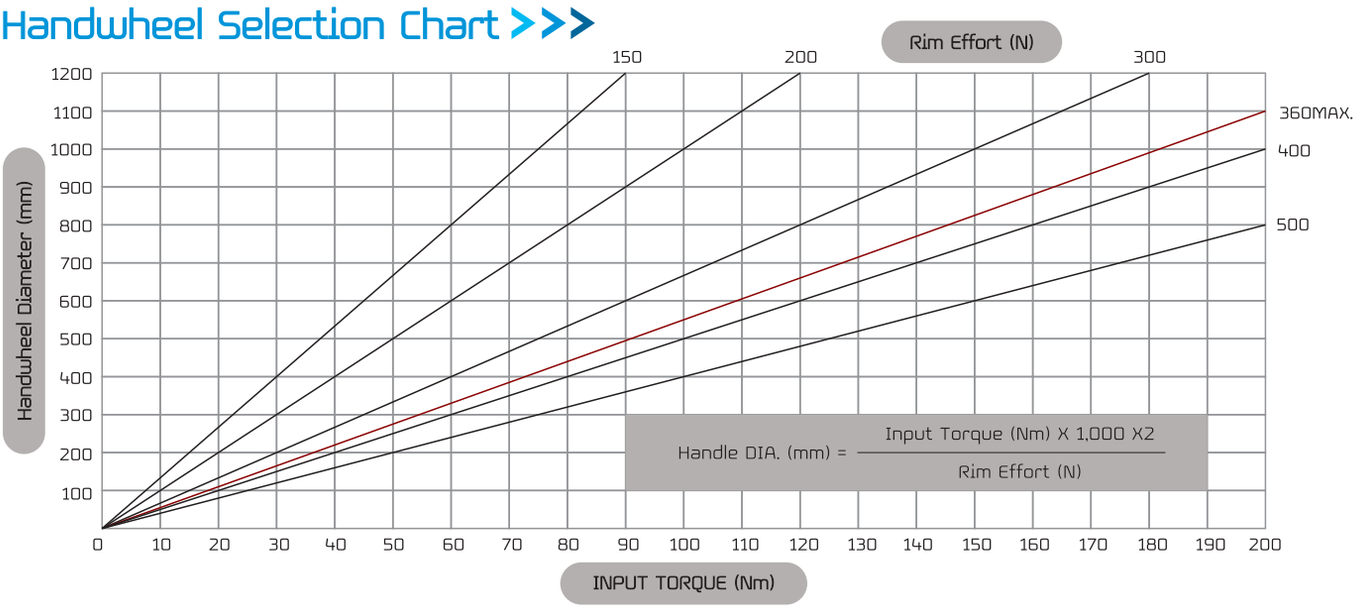

Size and component specification in this catalogue are subject to change without prior notice for quality improvement.
* Mark has been changed and updated.

M·O·V Type

Selection Chart for Electric Actuator Dimension

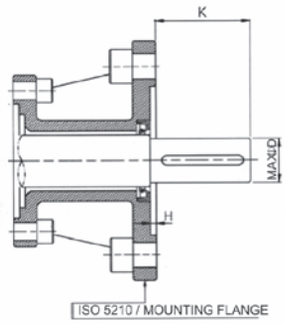

Spiral Bevel Gear Actuator >>>

Standard Type							
NO / MODEL	Flange Type						Max.ΦD & Key
	F–10,F–14,F–16		F–25,F–30		F–35,F–40		
	K	H	K	H	K	H	
SB–VS10	70	6	90	8	110	10	Φ30 (10X8)
SB–VS20							
SB–V0							Φ35 (10X8)
SB–V1							
SB–V2							Φ40 (12X8)
SB–V3							
SB–V35							Φ45 (14X9)
SB–V4							
SB–V5							
SB–V55							
SB–V6							Φ55 (16X10)
SB–V7							
SB–V75							Φ65 (18X11)
SB–V8							
SB–V85							Φ65 (18X11)
SB–V9							Φ 80 (22X14)
SB–V10							Φ 90 (25X14)

Support Type					
NO / MODEL	Flange Type				Max.ΦD & Key
	F–10,F–14,F–16		F–25,F–30		
	K	H	K	H	
SB–V0–1S,1SD	70	6	90	8	Φ30 (10X8)
SB–V1–1S,1SD					
SB–V2–1S,1SD					Φ30 (10X8)
SB–V3–1S,1SD					
SB–V35–1S,1SD					Φ35 (10X8)
SB–V4–1S,1SD					
SB–V5–1S,1SD					Φ40 (12X8)
SB–V55–1S,1SD					
SB–V6–1S,1SD					Φ45 (14X9)
SB–V7–1S,1SD					
SB–V75–1S,1SD					Φ55 (16X10)
SB–V8–1S,1SD					
SB–V85–1S,1SD					
SB–V9–1S,1SD					Φ70 (18X11)
SB–V10–1S,1SD					

Worm Gear Actuator >>>

Standard Type							
NO / MODEL	Flange Type						Max.ΦD & Key
	F–10,F–14,F–16		F–25,F–30		F–35,F–40		
	K	H	K	H	K	H	
SBWG–BF	70	6	90	8	110	10	Φ20 (6X6)
SBWG–0							
SBWG–00							Φ25 (8X7)
SBWG–01							
SBWG–02							Φ35 (10X8)
SBWG–03							
SBWG–35							
SBWG–04							Φ45 (14X9)
SBWG–05							
SBWG–55							
SBWG–06							Φ55 (16X10)
SBWG–07							
SBWG–75							Φ70 (18X11)
SBWG–08							
SBWG–09							
SBWG–10							Φ90 (25X14)
SBWG–11							
SBWG–12							Φ120 (32X18)
SBWG–13							

Support Type					
NO / MODEL	Flange Type				Max.ΦD & Key
	F–10,F–14,F–16		F–25,F–30		
	K	H	K	H	
SBWG–00–1S,1SD	70	6	90	8	Φ25 (8X7)
SBWG–01–1S,1SD					
SBWG–02–1S,1SD					Φ30 (10X8)
SBWG–03–1S,1SD					
SBWG–35–1S,1SD					
SBWG–04–1S,1SD					Φ35 (10X8)
SBWG–05–1S,1SD					
SBWG–55–1S,1SD					
SBWG–06–1S,1SD					Φ45 (14X9)
SBWG–07–1S,1SD					
SBWG–75–1S,1SD					Φ55 (16X10)
SBWG–08–1S,1SD					
SBWG–09–1S,1SD					
SBWG–10–1S,1SD					Φ70 (18X11)
SBWG–11–1S,1SD					
SBWG–12–1S,1SD					Φ70 (18X11)
SBWG–13–1S,1SD					

Size and component specification in this catalogue are subject to change without prior notice for quality improvement.
* Mark has been changed and updated.

Flange Dimensions

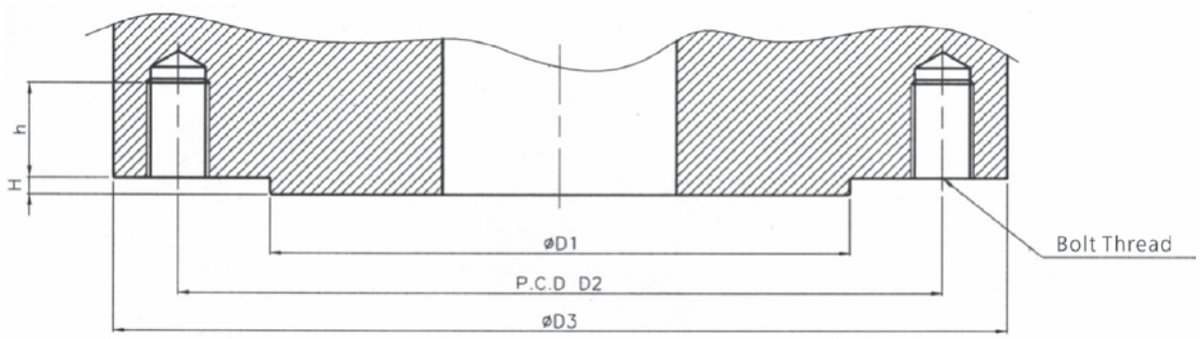

FLANGE TYPE	ISO 5210/1 MOUNTING FLANGE							
	ØD1	P.C.D D2	Ø D3	H MAX.	Bolt Thread		h (Tap Dp MIN.)	NO. of Screws
F–05	35	50	65	3	M6	1/4"–20UNC	9	4
F–07	55	70	90		M8	5/16"–18UNC	12	
F–10	70	102	125		M10	3/8"–16UNC	15	
F–12	85	125	150		M12	1/2"–13UNC	18	
F–14	100	140	175	4	M16	5/8"–11UNC	24	
F–16	130	165	210	5	M20	3/4"–10UNC	30	
F–25	200	254	300		M16	5/8"–11UNC	24	8
F–30	230	298	350		M20	3/4"–10UNC	30	
F–35	260	356	415		M30	1"–8UNC	45	
F–40	300	406	475	8	M36	1 1/4"–7UNC	54	
F–48	370	483	560		M36	1 1/4"–7UNC	54	12
F–60	470	603	686		M36	1 1/4"–7UNC	54	20
F–80	670	813	900	10	M42	1 1/2"–6UNC	63	20
F–100	870	1042	1200		M42	1 1/2"–6UNC	63	32

Position of Holes

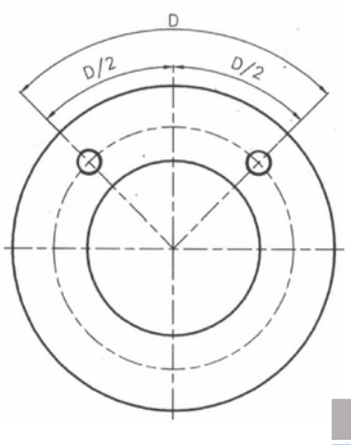

Global Leader
SAMBO
SPIRAL BEVEL GEAR ACTUATORS

The World's Highest Quality!

FLANGE TYPE	NO. of Screws	D/2
F–05 to F–16	4	45°
F–25 to F–40	8	22.5°
F–48	12	15°
F–60, F–80	20	9°
F–100	32	5.625°

Size and component specification in this catalogue are subject to change without prior notice for quality improvement.
* Mark has been changed and updated.

The SB Series Spiral Bevel Gears have the ability to be assembled with "Lost-Motion-[Hammer blow]" or with "No-Lost Motion" output drive arrangement

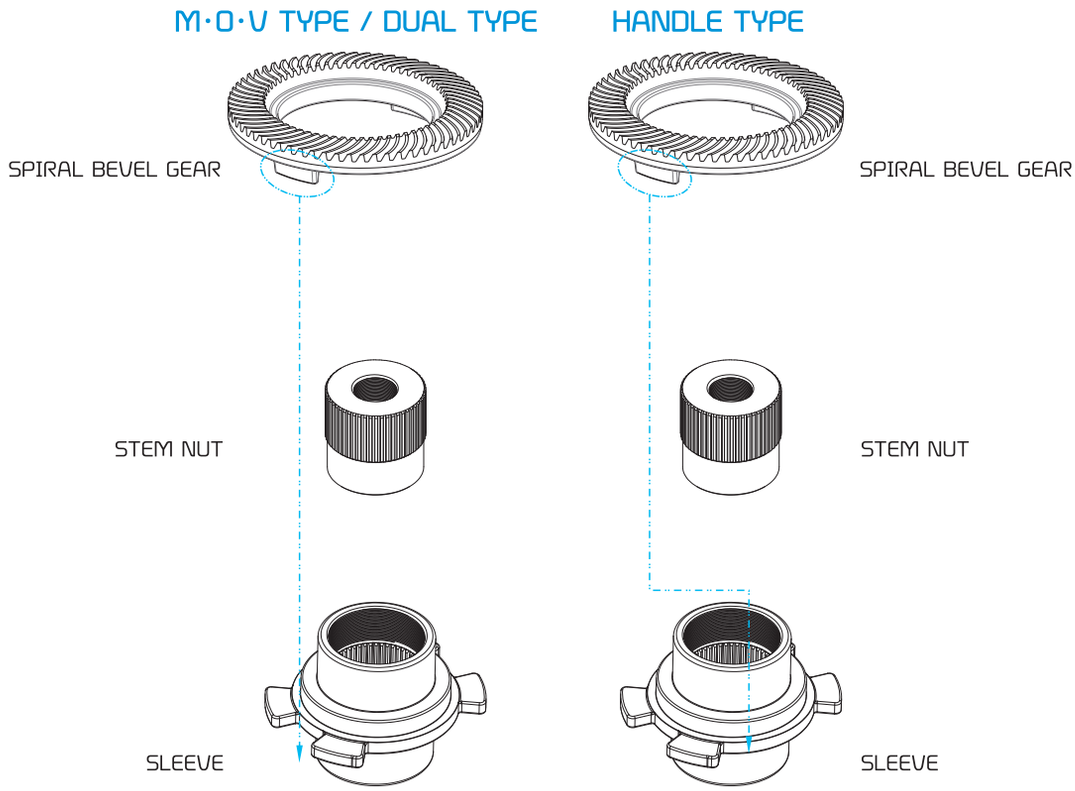

Fix Type (M·O·V/Dual) >>>

No-Lost Motion

This type eliminates the gap in the lug drive between the Spiral Bevel Gear and Drive Sleeve.
It is the preferred method for Electric Actuators having positioning control capability.

Hammer Blow Type (Handle) >>>

Lost Motion

This type eliminates the gap in the lug drive between the Spiral Bevel Gear and Drive Sleeve enabling a momentary impact.
It is the preferred method for all Manual operation and for Electric Actuators of Wedge Gates and Globe Valves.

Size and component specification in this catalogue are subject to change without prior notice for quality improvement.
* Mark has been changed and updated.

ETC

Twin Shaft Gear Actuators Type >>>

There are two input shafts in the below support box type. One shaft is for high speed and the other shaft is for low speed.

-1ST TYPE

Second Input Shaft (Low Speed Input Shaft)

Provides maximum mechanical advantage for seating and unseating of valves.

Primary Input Shaft (High Speed Input Shaft)

Allow for less turns after valve has been unseating.

Manual Both Ends >>>

The below input shaft type is used to require Gear Actuators which is operated by 2 spindles.
As option, there are motorized type, dial type and manual type.

Manual · Motorised >>>

Valve Spindle Cover Tubes >>>

Stem cover for valve can be offered as A53, SUS304, polycarbonate and etc. Stem cover and indicator sets can be made by several different types. The length of stem cover will be changed as per customer' s request.

A TYPE
Rising Indicators

B TYPE
No Hole Stem Cover

C TYPE
Gauge

D TYPE
Polycarbonate (Transparent)

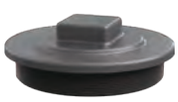

E TYPE
Stem Cap

F TYPE
PF Adapter

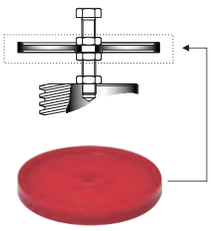

INDICATOR

The Other Used Options in SAMBO >>>

Sambo' s standard input shaft rotation is based on a clockwise input resulting in a clockwise output (Clockwise In = Clockwise Out). The reverse rotation can be operated. As per customer' s request, it can be made by such types as buried, submersible, marine, radiation and high & low temperature service and etc. Also, Gear ratio and specification of flange can be changed.

Size and component specification in this catalogue are subject to change without prior notice for quality improvement.
* Mark has been changed and updated.

SAMBO

STANDARD TYPE-A

Thrust & Torque Horizontal Input

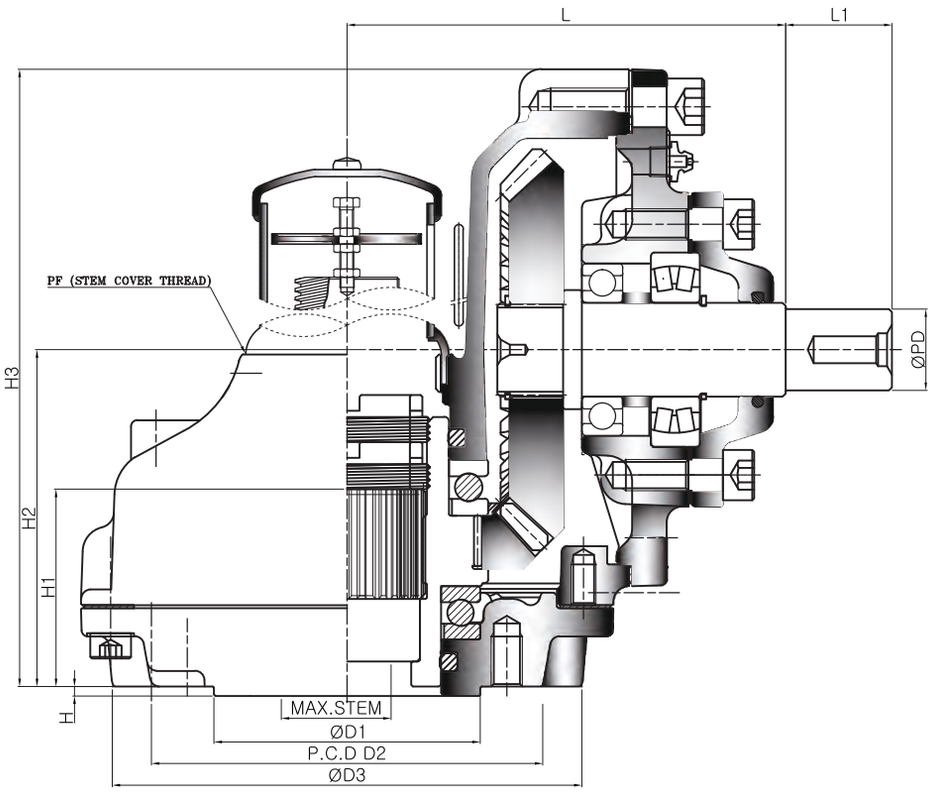

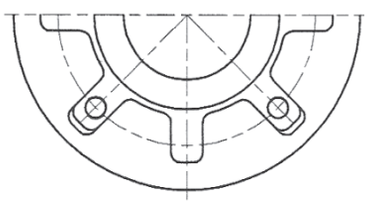

TYPE - A

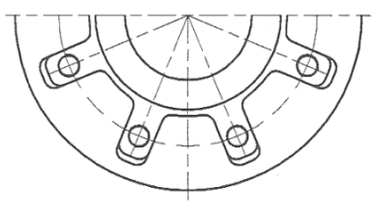

TYPE - B

Dimension >>>

UNIT : mm

DIM / MODEL	BASE PART							EXTERNAL PART				INPUT SHAFT PART			HAND WHEEL	STEM COVER
	TYPE	FLANGE	ØD1	P.C.D ØD2	P.C.D N-H-DP	ØD3	H	H1	H2	H3	L	L1	ØPD	KEY		
SB-MT-VS10	A	F-10	70	102	4-M10-15	125	3	56	102.5	179	129	34	26	8X7	250	PF2"
SB-MT-VS20		F-12	85	125	4-M12-18	150		63	107.5	197	140				300	
SB-MT-V0		F-14	100	140	4-M16-24	175		72	130	231	166.5	34	32	10X8	400	PF2-1/2"
SB-MT-V1		F-16	130	165	4-M20-30	210		84	157	275	181				500	PF3"
SB-MT-V2	B	F-16 (F-20)	140	205	8-M16-24	250	3	95	185	311	204	34	32	10X8	630	PF3-1/2"
SB-MT-V3		F-25	200	254	8-M16-24	300		102	211	361	227				710	PF4"
SB-MT-V35		F-30	230	298	8-M20-30	350		122	250	413	286	44	38	12X8	800	PF5"
SB-MT-V4		F-35	260	356	8-M30-45	410		133	285	476	313				900	PF6"
SB-MT-V5		F-40	300	406	8-M36-55	475		161	324.5	540	337					
SB-MT-V55		F-40	300	406	8-M36-55	475		171	358	586	358					
SB-MT-V6		F-40	300	406	8-M36-55	475		185	387	649	409	58	50	16X10	1000	PF8"

Size and component specification in this catalogue are subject to change without prior notice for quality improvement.
* Mark has been changed and updated.

Feature >>>

- This series suitable for use with Gate & Globe type valve.
  Also sluice gates and any other type requiring linear motion for thrust and torque applications.
- Unique Top Entry Replaceable Stem Nut. High Tensile Aluminum bronze material providing corrosion and abrasion resistance.
- Castings are Ductile Iron, class 65-45-12 providing high strength and impact resistance.
- Heavy duty roller bearings supporting both radial & axial thrust loads.
- Gears are Machine cut, heat treated and ground for optimum operation Units are completely O-Ring Sealed suitable for temporary submergence to meet Ip67 class.
- Many options, such as hand wheels, chain wheels, stem covers, position dial indicators are available.

DIAL INDICATOR

A unique local position dial indicator is available.
It is graduated in percent from 0% (close) to 100% (open).

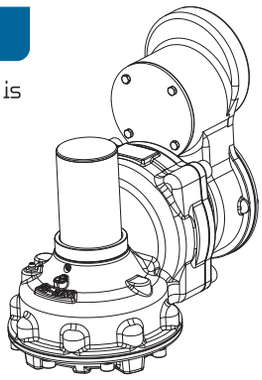

M·O·V OPTION

Bevel Gear can be provided with Motor actuator input flanges to accept standard ISO Mounting Base.

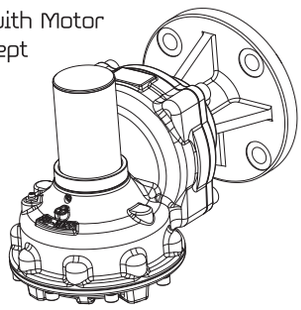

Global Leader
SAMBO
GEAR ACTUATORS for Industrial Valves

The World's Highest Quality!

Selection Chart for Manual Operation >>>

SIZE / MODEL	GEAR RATIO	MAX. STEM ACCEPTANCE		BASE MOUNTING OPTION & STANDARD	MAX. THRUST CAPACITY		MAX. TORQUE CAPACITY		WEIGHT
		TW	KEY		KN	lbf	N–m	Ft . lbf	Kg
SB–MT–VS10	1 : 1	30	22 (8X7)	F–07, F–10	75.5	16970	220	162	10
SB–MT–VS20	1 : 1	40	32 (10X8)	F–10, F–12	113	25400	370	273	14
SB–MT–V0	1 : 1	46	38 (12X8)	F–12, F–14	127	28550	600	442	21
SB–MT–V1	1 : 1	55	45 (14X9)	F–14, F–16	141	31700	980	723	29
SB–MT–V2	1 : 1	62	52 (16X10)	F–16, (F–20)	190	42710	1500	1106	45
SB–MT–V3	1 : 1	72	60 (18X11)	(F–20), F–25	288	64750	2500	1844	59
SB–MT–V35	1 : 1	85	72 (20X12)	F–25, F–30	350	78680	3500	2581	102
SB–MT–V4	1 : 1	98	84 (22X14)	F–30, F–35	400	89920	5200	3835	129
SB–MT–V5	1 : 1	110	95 (28X16)	F–25, F–30, F–35, F–40	510	114650	7800	5753	200
SB–MT–V55	1 : 1	120	105 (28X16)	F–30, F–35, F–40	1500	337210	10400	7671	254
SB–MT–V6	1 : 1	130	115 (32X18)	F–30, F–35, F–40	2310	519300	13000	9588	310

Size and component specification in this catalogue are subject to change without prior notice for quality improvement.
* Mark has been changed and updated.

STANDARD TYPE-A

Thrust & Torque Horizontal Input

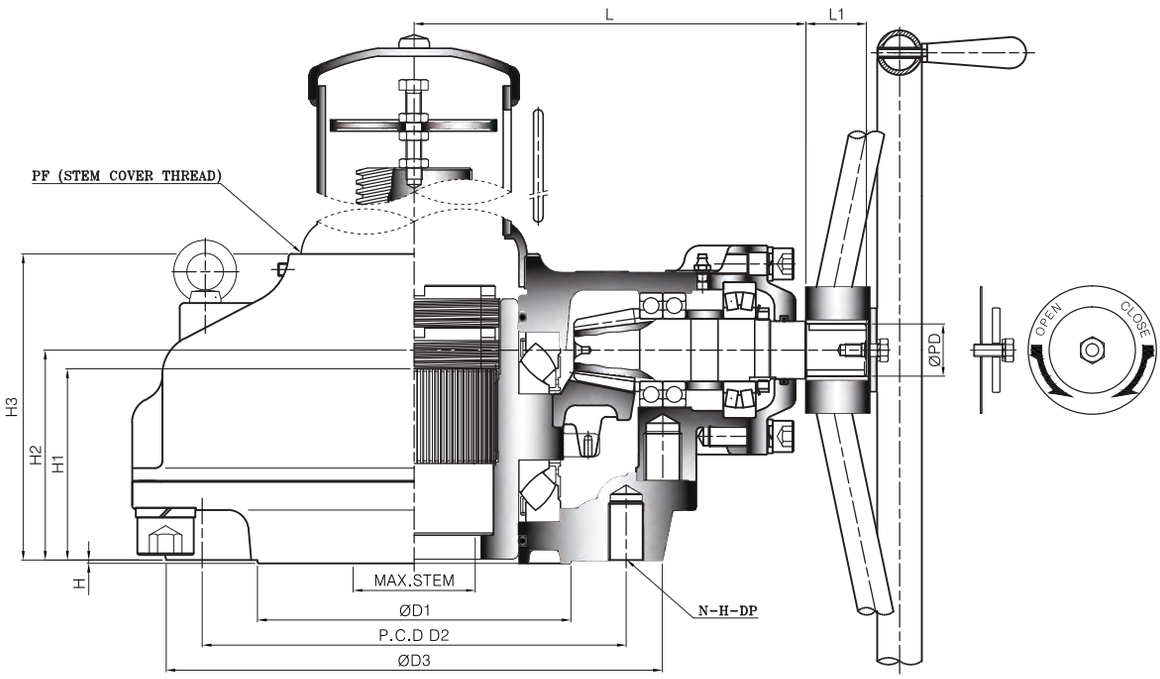

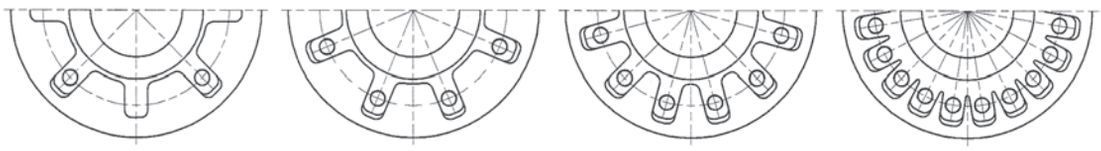

TYPE - A TYPE - B TYPE - C TYPE - D

Dimension >>>

UNIT : mm

DIM / MODEL	BASE PART							EXTERNAL PART				INPUT SHAFT PART			HAND WHEEL	STEM COVER
	TYPE	FLANGE	ØD1	P.C.D ØD2	P.C.D N-H-DP	ØD3	H	H1	H2	H3	L	L1	ØPD	KEY		
* SB-SP-VS10	A	F-10	70	102	4-M10-15	125	3	56	71	95	121	34	26	8X7	250	PF2"
* SB-SP-VS20		F-12	85	125	4-M12-18	150		63	78.5	106	131				300	PF2-1/2"
* SB-SP-V0		F-14	100	140	4-M16-24	175		72	81	121	154.5	34	32	10X8	400	
* SB-SP-V1		F-16	130	165	4-M20-30	210		84	98	140	167				500	PF3"
* SB-SP-V2	B	F-16 (F-20)	140	205	8-M16-24	250	3	95	115	159.5	188	34	32	10X8	630	PF3-1/2"
* SB-SP-V3		F-25	200	254	8-M16-24	300		102	119	166.5	208				710	PF4"
* SB-SP-V35		F-30	230	298	8-M20-30	350		122	138	195	266	44	38	12X8	800	PF5"
* SB-SP-V4		F-35	260	356	8-M30-45	410		133	150	209	291				900	PF6"
* SB-SP-V5		F-40	300	406	8-M36-55	475		161	177	245	313					
* SB-SP-V55		F-40	300	406	8-M36-55	475		171	192	261	333					
* SB-SP-V6		F-40	300	406	8-M36-55	475		185	201	283	381	58	50	16X10	1000	PF8"

Size and component specification in this catalogue are subject to change without prior notice for quality improvement.
* Mark has been changed and updated.

Feature >>>

- This series suitable for use with Gate & Globe type valve. Also sluice gates and any other type requiring linear motion for thrust and torque applications.
- Unique Top Entry Replaceable Stem Nut. High Tensile Aluminum bronze material providing corrosion and abrasion resistance.
- Castings are Ductile Iron, class 65-45-12 providing high strength and impact resistance.
- Heavy duty roller bearings supporting both radial & axial thrust loads.
- Gears are Machine cut, heat treated and ground for optimum operation Units are completely O-Ring Sealed suitable for temporary submergence to meet Ip67 class.
- Many options, such as hand wheels, chain wheels, stem covers, position dial indicators are available.

DIAL INDICATOR

A unique local position dial indicator is available.
It is graduated in percent from 0% (close) to 100% (open).

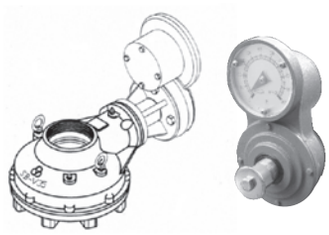

M·O·V OPTION

Bevel Gear can be provided with Motor actuator input flanges to accept standard ISO Mounting Base.

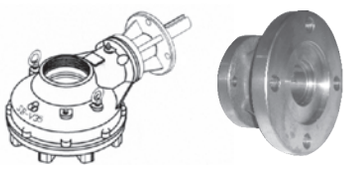

LOCKING DEVICE OPTION

Input can be equipped with a Handwheel locking device for Manually operated units.

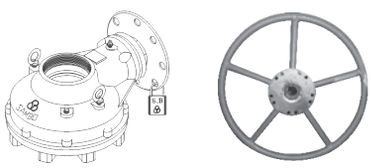

SAMBO The World's Highest Quality!

Global Leader
SAMBO
SPIRAL BEVEL GEAR ACTUATORS

The World's Highest Quality!

Selection Chart for Manual Operation >>>

SIZE / MODEL	GEAR RATIO	MAX.STEM ACCEPTANCE		BASE MOUNTING OPTION & STANDARD	MAX. THRUST CAPACITY		MAX. TORQUE CAPACITY		WEIGHT
		TW	KEY		KN	lbf	N–m	Ft . lbf	Kg
* SB–SP–VS10	2 : 1	30	22 (8X7)	F–07, F–10	75.5	16970	220	162	8
* SB–SP–VS20	2 : 1	40	32 (10X8)	F–10, F–12	113	25400	370	273	11
* SB–SP–V0	2 : 1	46	38 (12X8)	F–10, F–12, F–14	127	28550	600	442	16
* SB–SP–V1	2 & 4 : 1	55	45 (14X9)	F–14, F–16	141	31700	980	723	22
* SB–SP–V2	3 & 5 : 1	62	52 (16X10)	F–14, F–16, (F–20)	190	42710	1500	1106	34
* SB–SP–V3	4 & 6 : 1	72	60 (18X11)	F–16, (F–20), F–25	288	64750	2500	1844	45
* SB–SP–V35	4 & 6 : 1	85	72 (20X12)	F–25, F–30	350	78680	3500	2581	78
* SB–SP–V4	5 & 8 : 1	98	84 (22X14)	F–25, F–30, F–35	400	89920	5200	3835	99
* SB–SP–V5	5 & 8 : 1	110	95 (28X16)	F–25, F–30, F–35, F–40	510	114650	7800	5753	150
* SB–SP–V55	6 & 8 : 1	120	105 (28X16)	F–30, F–35, F–40	1500	337210	10400	7671	201
* SB–SP–V6	6 & 8 : 1	130	115 (32X18)	F–30, F–35, F–40	2310	519300	13000	9588	253

Size and component specification in this catalogue are subject to change without prior notice for quality improvement.
* Mark has been changed and updated.

SAMBO

STANDARD TYPE-A

Thrust & Torque Horizontal Input

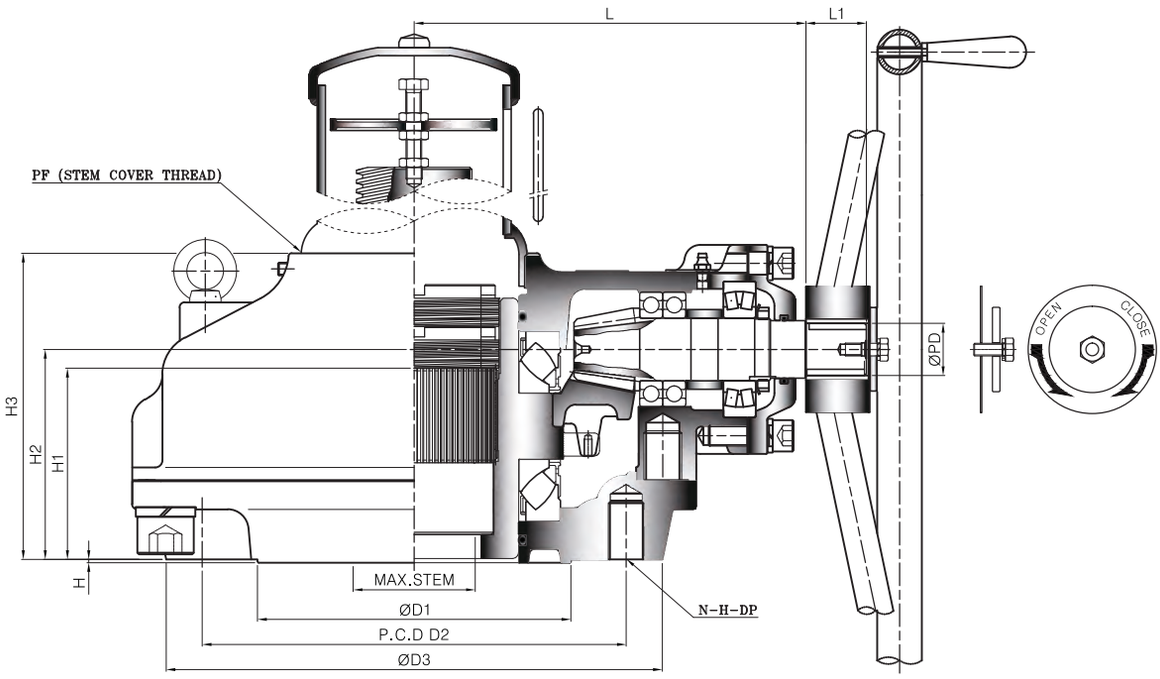

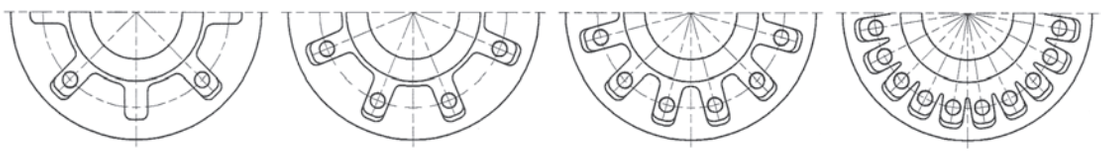

TYPE - A TYPE - B TYPE - C TYPE - D

Dimension >>>

UNIT : mm

DIM / MODEL	BASE PART							EXTERNAL PART				INPUT SHAFT PART			HAND WHEEL	STEM COVER
	TYPE	FLANGE	ØD1	P.C.D ØD2	P.C.D N-H-DP	ØD3	H	H1	H2	H3	L	L1	ØPD	KEY		
SB-VS10	A	F-10	70	102	4-M10-15	125	3	56	71	95	121	34	26	8X7	250	PF2"
SB-VS20		F-12	85	125	4-M12-18	150		63	78.5	106	131				300	PF2-1/2"
SB-V0		F-14	100	140	4-M16-24	175		72	81	121	154.5	34	32	10X8	400	
SB-V1		F-16	130	165	4-M20-30	210		84	98	140	167				500	PF3"
SB-V2	B	F-16 (F-20)	140	205	8-M16-24	250	3	95	115	159.5	188	34	32	10X8	630	PF3-1/2"
SB-V3		F-25	200	254	8-M16-24	300		102	119	166.5	208				710	PF4"
SB-V35		F-30	230	298	8-M20-30	350		122	138	195	266	44	38	12X8	800	PF5"
SB-V4		F-35	260	356	8-M30-45	410		133	150	209	291				900	PF6"
SB-V5		F-40	300	406	8-M36-55	475		161	177	245	313					
SB-V55		F-40	300	406	8-M36-55	475		171	192	261	333					
SB-V6		F-40	300	406	8-M36-55	475		185	201	283	381	58	50	16X10	1000	PF8"
SB-V7	C	F-48	370	483	12-M36-55	560	5	206	222	309	409	58	50	16X10	1000	PF8"
SB-V75		F-48	370	483	12-M36-55	560		221	248	340	441	58	50	16X10	1000	PF10"
SB-V8		F-48	370	483	12-M36-55	560		233	259	352	472					
SB-V85	D	F-60	470	603	20-M36-55	700	5	248	278	373	525	58	50	16X10	1000	PF12"
SB-V9		F-60	470	603	20-M36-55	700		263	295	398	591	58	50	16X10	1000	PF12"
* SB-V10		F-80	670	813	20-M42-63	900		378	375	490	664					

Size and component specification in this catalogue are subject to change without prior notice for quality improvement.
* Mark has been changed and updated.

Feature >>>

- This series suitable for use with Gate & Globe type valve. Also sluice gates and any other type requiring linear motion for thrust and torque applications.
- Unique Top Entry Replaceable Stem Nut. High Tensile Aluminum bronze material providing corrosion and abrasion resistance.
- Castings are Ductile Iron, class 65-45-12 providing high strength and impact resistance.
- Heavy duty roller bearings supporting both radial & axial thrust loads.
- Gears are Machine cut, heat treated and ground for optimum operation Units are completely O-Ring Sealed suitable for temporary submergence to meet Ip67 class.
- Many options, such as hand wheels, chain wheels, stem covers, position dial indicators are available.

DIAL INDICATOR

A unique local position dial indicator is available.
It is graduated in percent from 0% (close) to 100% (open).

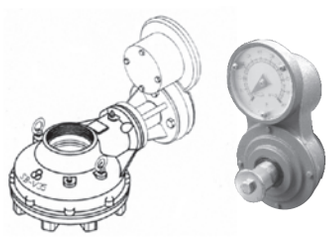

M·O·V OPTION

Bevel Gear can be provided with Motor actuator input flanges to accept standard ISO Mounting Base.

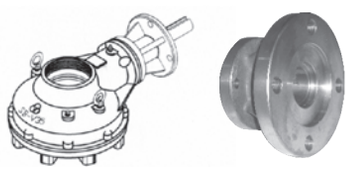

LOCKING DEVICE OPTION

Input can be equipped with a Handwheel locking device for Manually operated units.

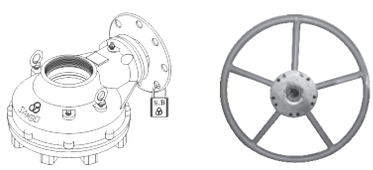

Selection Chart for Manual Operation >>>

SIZE / MODEL	GEAR RATIO	MAX.STEM ACCEPTANCE		BASE MOUNTING OPTION & STANDARD	MAX. THRUST CAPACITY		MAX. TORQUE CAPACITY		WEIGHT
		TW	KEY		KN	lbf	N–m	Ft . lbf	Kg
SB–VS10	2.5 : 1	30	22 (8X7)	F–07, F–10	75.5	16970	220	162	8
SB–VS20	3 : 1	40	32 (10X8)	F–10, F–12	113	25400	370	273	11
SB–V0	3.25 : 1	46	38 (12X8)	F–10, F–12, F–14	127	28550	600	442	16
SB–V1	3.5 : 1	55	45 (14X9)	F–14, F–16	141	31700	980	723	22
SB–V2	4 : 1	62	52 (16X10)	F–14, F–16, (F–20)	190	42710	1500	1106	34
SB–V3	5 : 1	72	60 (18X11)	F–16, (F–20), F–25	288	64750	2500	1844	45
SB–V35	5.5 : 1	85	72 (20X12)	F–25, F–30	350	78680	3500	2581	78
SB–V4	6 : 1	98	84 (22X14)	F–25, F–30, F–35	400	89920	5200	3835	99
SB–V5	6.56 : 1	110	95 (28X16)	F–25, F–30, F–35, F–40	510	114650	7800	5753	150
SB–V55	7 : 1	120	105 (28X16)	F–30, F–35, F–40	1500	337210	10400	7671	201
SB–V6	7 : 1	130	115 (32X18)	F–30, F–35, F–40	2310	519300	13000	9588	253
SB–V7	7.56 : 1	150	130 (36X20)	F–35, F–40, F–48	2500	562020	17600	12981	318
SB–V75	8 : 1	160	140 (36X20)	F–40, F–48	3450	775590	21000	15489	460
SB–V8	8 : 1	180	160 (40X22)	F–40, F–48	4100	921700	32000	23602	473
SB–V85	8 : 1	190	170 (40X22)	F–48, F–60	5150	1157760	40000	29502	797
SB–V9	8 : 1	200	180 (45X25)	F–48, F–60	5450	1225180	55000	40566	736
* SB–V10	8 : 1	220	200 (50X28)	F–60, F–80	7300	1641105	75000	55317	883

Size and component specification in this catalogue are subject to change without prior notice for quality improvement.
* Mark has been changed and updated.

STANDARD TYPE-A

Thrust & Torque Horizontal Input with Single Reduction Gear Attachment

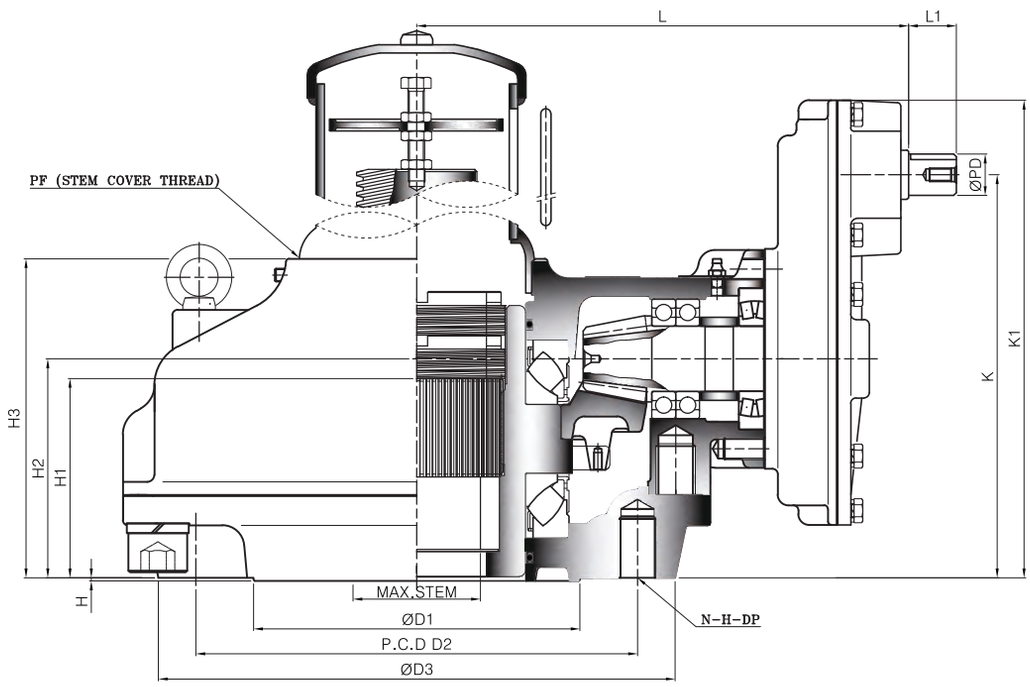

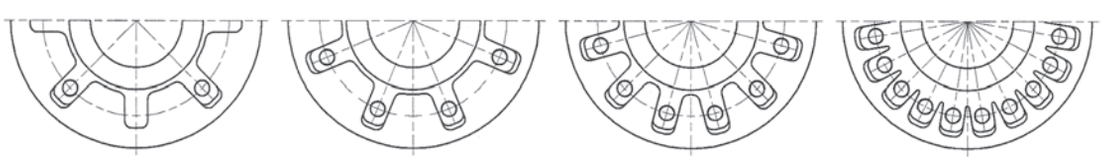

TYPE - A TYPE - B TYPE - C TYPE - D

Dimension >>>

UNIT : mm

DIM / MODEL	BASE PART							EXTERNAL PART						INPUT SHAFT PART			HAND WHEEL	STEM COVER
	TYPE	FLANGE	ØD1	P.C.D ØD2	P.C.D N-H-DP	ØD3	H	H1	H2	H3	K	K1	L	L1	ØPD	KEY		
SB-V0-1S	A	F-14	100	140	4-M16-24	175	3	72	81	121	160	203	201.5	34	26	8X7	250	PF2-1/2"
SB-V1-1S		F-16	130	165	4-M20-30	210		84	98	140	177	220	214				300	PF3"
SB-V2-1S	B	F-16 (F-20)	140	205	8-M16-24	250	3	95	115	159.5	208	256	236.5	34	26	8X7	400	PF3-1/2"
SB-V3-1S		F-25	200	254	8-M16-24	300		102	119	166.5	212	260	256.5				500	PF4"
SB-V35-1S		F-30	230	298	8-M20-30	350		122	138	195	259	316	333	34	32	10X8	630	PF5"
SB-V4-1S		F-35	260	356	8-M30-45	410		133	150	209	271	328	358					PF6"
SB-V5-1S		F-40	300	406	8-M36-55	475		161	177	245	322	384.5	387				710	
SB-V55-1S		F-40	300	406	8-M36-55	475		171	192	261	337	399.5	407					
SB-V6-1S		F-40	300	406	8-M36-55	475		185	201	283	370	439	472	44	38	12X8	800	PF8"
SB-V7-1S	C	F-48	370	483	12-M36-55	560	5	206	222	309	391	459	497	44	38	12X8	900	PF8"
SB-V75-1S		F-48	370	483	12-M36-55	560		221	248	340	478	564	620	58	50	16X10	1000	PF10"
SB-V8-1S		F-48	370	483	12-M36-55	560		233	259	352	489	575	651					
SB-V85-1S	D	F-60	470	603	20-M36-55	700	5	248	278	373	508	594	695	58	50	16X10	1000	PF12"
SB-V9-1S		F-60	470	603	20-M36-55	700		263	295	398	580	696	821	58	50	16X10	1000	PF12"
* SB-V10-1S		F-80	670	813	20-M42-63	900		378	375	490	659	775	886					

Size and component specification in this catalogue are subject to change without prior notice for quality improvement.
* Mark has been changed and updated.

Feature >>>

- This series suitable for use with Gate & Globe type valve. Also sluice gates and any other type requiring linear motion for thrust and torque applications.
- Unique Top Entry Replaceable Stem Nut. High Tensile Aluminum bronze material providing corrosion and abrasion resistance.
- Castings are Ductile Iron, class 65-45-12 providing high strength and impact resistance.
- Heavy duty roller bearings supporting both radial & axial thrust loads.
- Gears are Machine cut, heat treated and ground for optimum operation Units are completely O-Ring Sealed suitable for temporary submergence to meet Ip67 class.
- Many options, such as hand wheels, chain wheels, stem covers, position dial indicators are available.

DIAL INDICATOR

A unique local position dial indicator is available.
It is graduated in percent from 0% (close) to 100% (open).

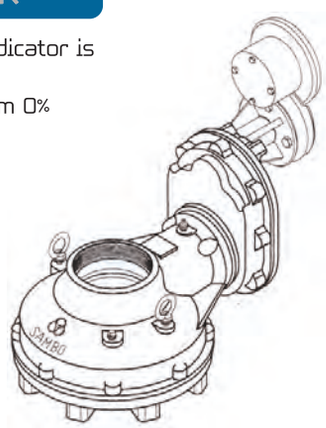

M·O·V OPTION

Bevel Gear can be provided with Motor actuator input flanges to accept standard ISO Mounting Base.

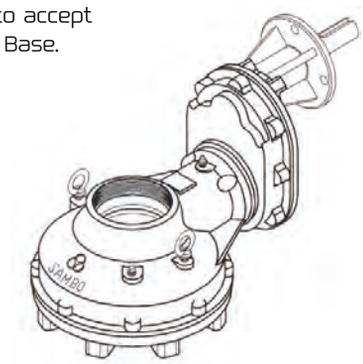

Selection Chart for Manual Operation >>>

SIZE / MODEL	GEAR RATIO	MAX. STEM ACCEPTANCE		BASE MOUNTING OPTION & STANDARD	MAX. THRUST CAPACITY		MAX. TORQUE CAPACITY		WEIGHT
		TW	KEY		KN	lbf	N–m	Ft . lbf	Kg
SB–V0–1S	6.5 : 1	46	38 (12X8)	F–10, F–12, F–14	127	28550	600	442	20
SB–V1–1S	7 : 1	55	45 (14X9)	F–14, F–16	141	31700	980	723	26
SB–V2–1S	10.13 : 1	62	52 (16X10)	F–14, F–16, (F–20)	190	42710	1500	1106	41
SB–V3–1S	12.66 : 1	72	60 (18X11)	F–16, (F–20), F–25	288	64750	2500	1844	52
SB–V35–1S	16.5 : 1	85	72 (20X12)	F–25, F–30	350	78680	3500	2581	90
SB–V4–1S	18 : 1	98	84 (22X14)	F–25, F–30, F–35	400	89920	5200	3835	112
SB–V5–1S	22.94 : 1	110	95 (28X16)	F–25, F–30, F–35, F–40	510	114650	7800	5753	163
SB–V55–1S	24.5 : 1	120	105 (28X16)	F–30, F–35, F–40	1500	337210	10400	7671	214
SB–V6–1S	28 : 1	130	115 (32X18)	F–30, F–35, F–40	2310	519300	13000	9588	281
SB–V7–1S	30.22 : 1	150	130 (36X20)	F–35, F–40, F–48	2500	562020	17600	12981	346
SB–V75–1S	40 : 1	160	140 (36X20)	F–40, F–48	3450	775590	21000	15489	532
SB–V8–1S	40 : 1	180	160 (40X22)	F–40, F–48	4100	921700	32000	23602	545
SB–V85–1S	40 : 1	190	170 (40X22)	F–48, F–60	5150	1157760	40000	29502	870
SB–V9–1S	40 : 1	200	180 (45X25)	F–48, F–60	5450	1225180	55000	40566	1200
* SB–V10–1S	40 : 1	220	200 (50X28)	F–60, F–80	7300	1641105	75000	55317	1410

Size and component specification in this catalogue are subject to change without prior notice for quality improvement.
* Mark has been changed and updated.

STANDARD TYPE-A Twin Shaft

Thrust & Torque(Twin Shaft) Horizontal Input with Single Reduction Gear Attachment

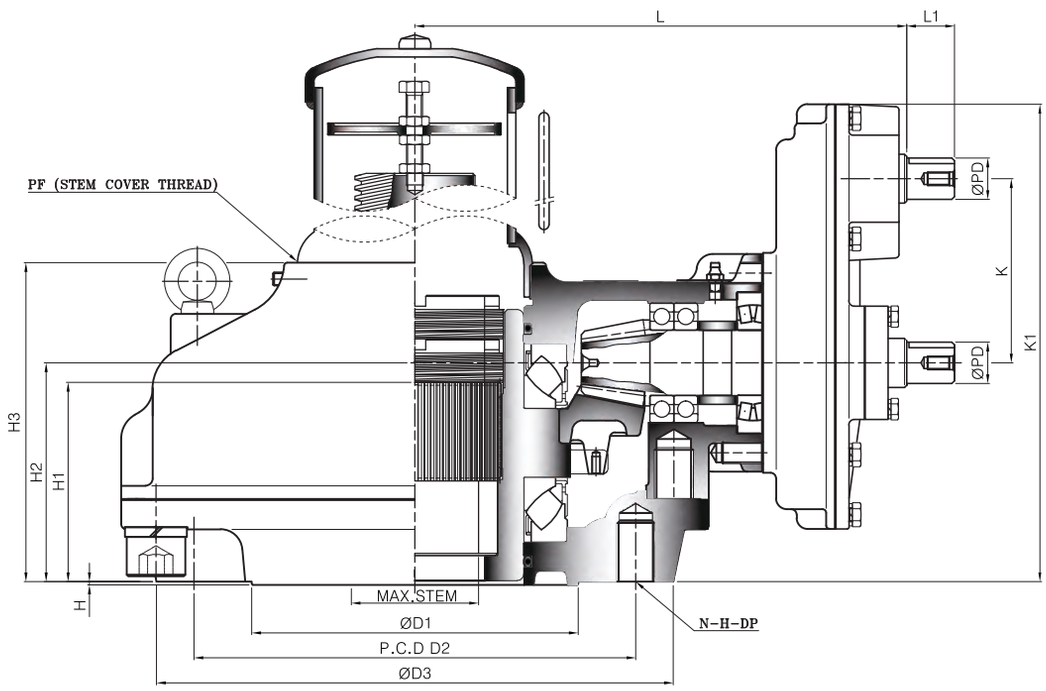

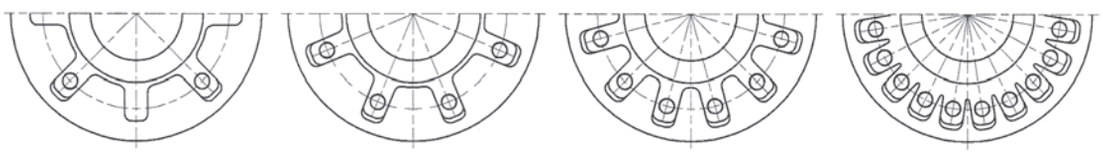

TYPE - A TYPE - B TYPE - C TYPE - D

Dimension >>>

UNIT : mm

MODEL \ DIM	BASE PART							EXTERNAL PART						INPUT SHAFT PART			HAND WHEEL	STEM COVER
	TYPE	FLANGE	ØD1	P.C.D ØD2	P.C.D N-H-DP	ØD3	H	H1	H2	H3	K	K1	L	L1	ØPD	KEY		
SB-V0-1ST	A	F-14	100	140	4-M16-24	175	3	72	81	121	79	203	201.5	34	26	8X7	250	PF2-1/2"
SB-V1-1ST		F-16	130	165	4-M20-30	210		84	98	140	79	220	214				300	PF3"
SB-V2-1ST	B	F-16 (F-20)	140	205	8-M16-24	250	3	95	115	159.5	93	256	236.5	34	26	8X7	400	PF3-1/2"
SB-V3-1ST		F-25	200	254	8-M16-24	300		102	119	166.5	93	260	256.5				500	PF4"
SB-V35-1ST		F-30	230	298	8-M20-30	350		122	138	195	121	316	333	34	32	10X8	630	PF5"
SB-V4-1ST		F-35	260	356	8-M30-45	410		133	150	209	121	328	358					PF6"
SB-V5-1ST		F-40	300	406	8-M36-55	475		161	177	245	145	384.5	387				710	
SB-V55-1ST		F-40	300	406	8-M36-55	475		171	192	261	145	399.5	407					
SB-V6-1ST		F-40	300	406	8-M36-55	475		185	201	283	169	439	472	44	38	12X8	800	PF8"
SB-V7-1ST	C	F-48	370	483	12-M36-55	560	5	206	222	309	169	459	497	44	38	12X8	900	PF8"
SB-V75-1ST		F-48	370	483	12-M36-55	560		221	248	340	230	564	620	58	50	16X10	1000	PF10"
SB-V8-1ST		F-48	370	483	12-M36-55	560		233	259	352	230	575	651	58	50	16X10	1000	PF10"
SB-V85-1ST	D	F-60	470	603	20-M36-55	700	5	248	278	373	230	594	695	58	50	16X10	1000	PF12"
SB-V9-1ST		F-60	470	603	20-M36-55	700		263	295	398	284	696	821	58	50	16X10	1000	PF12"
* SB-V10-1ST		F-80	670	813	20-M42-63	900		378	375	490	284	775	886					

Size and component specification in this catalogue are subject to change without prior notice for quality improvement.
* Mark has been changed and updated.

Feature >>>

- This series suitable for use with Gate & Globe type valve. Also sluice gates and any other type requiring linear motion for thrust and torque applications.
- Unique Top Entry Replaceable Stem Nut. High Tensile Aluminum bronze material providing corrosion and abrasion resistance.
- Castings are Ductile Iron, class 65-45-12 providing high strength and impact resistance.
- Heavy duty roller bearings supporting both radial & axial thrust loads.
- Gears are Machine cut, heat treated and ground for optimum operation Units are completely O-Ring Sealed suitable for temporary submergence to meet Ip67 class.
- Many options, such as hand wheels, chain wheels, stem covers, position dial indicators are available.

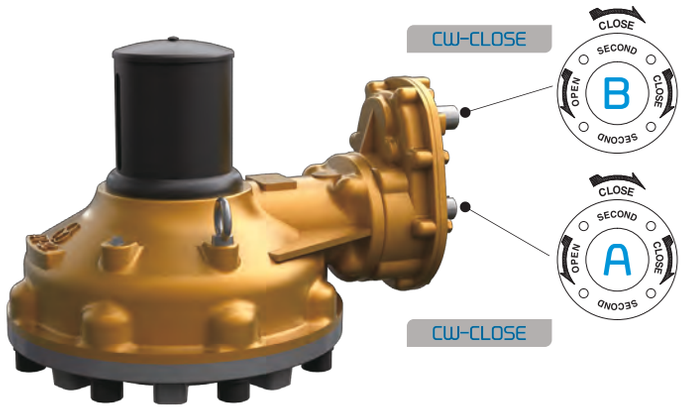

A. Primary Input Shaft (High Speed Input Shaft)
Allow for less turns after valve has been unseating.

B. Second Input Shaft (Low Speed Input Shaft)
Provides maximum mechanical advantage for seating and unseating of valves.

Bevel Gear

SAMBO
The World's Highest Quality!

Global Leader
SAMBO
SPIRAL BEVEL GEAR ACTUATORS

The World's Highest Quality!

Selection Chart for Manual Operation >>>

SIZE / MODEL	GEAR RATIO		MAX. STEM ACCEPTANCE		BASE MOUNTING OPTION & STANDARD	MAX. THRUST CAPACITY		MAX. TORQUE CAPACITY		WEIGHT
	PRIMARY	SECOND	TW	KEY		KN	lbf	N–m	Ft . lbf	Kg
SB–V0–1ST	3.25 : 1	6.5 : 1	46	38 (12X8)	F–10, F–12, F–14	127	28550	600	442	20
SB–V1–1ST	3.5 : 1	7 : 1	55	45 (14X9)	F–14, F–16	141	31700	980	723	26
SB–V2–1ST	4 : 1	10.13 : 1	62	52 (16X10)	F–14, F–16, (F–20)	190	42710	1500	1106	41
SB–V3–1ST	5 : 1	12.66 : 1	72	60 (18X11)	F–16, (F–20), F–25	288	64750	2500	1844	52
SB–V35–1ST	5.5 : 1	16.5 : 1	85	72 (20X12)	F–25, F–30	350	78680	3500	2581	90
SB–V4–1ST	6 : 1	18 : 1	98	84 (22X14)	F–25, F–30, F–35	400	89920	5200	3835	112
SB–V5–1ST	6.56 : 1	22.94 : 1	110	95 (28X16)	F–25, F–30, F–35, F–40	510	114650	7800	5753	163
SB–V55–1ST	7 : 1	24.5 : 1	120	105 (28X16)	F–30, F–35, F–40	1500	337210	10400	7671	214
SB–V6–1ST	7 : 1	28 : 1	130	115 (32X18)	F–30, F–35, F–40	2310	519300	13000	9588	281
SB–V7–1ST	7.56 : 1	30.22 : 1	150	130 (36X20)	F–35, F–40, F–48	2500	562020	17600	12981	346
SB–V75–1ST	8 : 1	40 : 1	160	140 (36X20)	F–40, F–48	3450	775590	21000	15489	532
SB–V8–1ST	8 : 1	40 : 1	180	160 (40X22)	F–40, F–48	4100	921700	32000	23602	545
SB–V85–1ST	8 : 1	40 : 1	190	170 (40X22)	F–48, F–60	5150	1157760	40000	29502	870
SB–V9–1ST	8 : 1	40 : 1	200	180 (45X25)	F–48, F–60	5450	1225180	55000	40566	1200
* SB–V10–1ST	8 : 1	40 : 1	220	200 (50X28)	F–60, F–80	7300	1641105	75000	55317	1410

Size and component specification in this catalogue are subject to change without prior notice for quality improvement.
* Mark has been changed and updated.

SAMBO

STANDARD TYPE-A

Thrust & Torque Horizontal Input with Double Reduction Gear Attachment

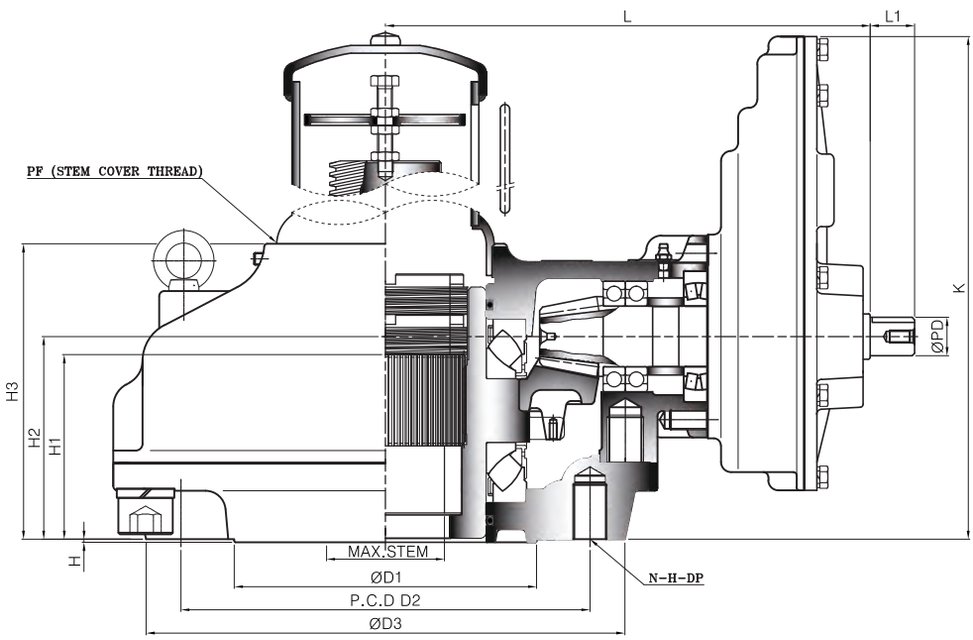

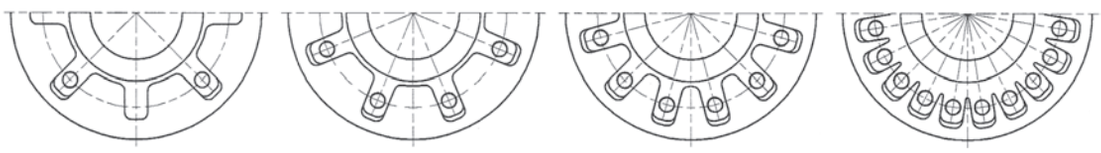

TYPE - A TYPE - B TYPE - C TYPE - D

Dimension >>>

UNIT : mm

DIM / MODEL	BASE PART							EXTERNAL PART					INPUT SHAFT PART			HAND WHEEL	STEM COVER
	TYPE	FLANGE	ØD1	P.C.D ØD2	P.C.D N-H-DP	ØD3	H	H1	H2	H3	K	L	L1	ØPD	KEY		
* SB-V0-1SD	A	F-14	100	140	4-M16-24	175	3	72	81	121	225	231	34	26	8X7	250	PF2-1/2"
* SB-V1-1SD		F-16	130	165	4-M20-30	210		84	98	140	242	243.5				300	PF3"
SB-V2-1SD	B	F-16 (F-20)	140	205	8-M16-24	250	3	95	115	159.5	259	260.5	34	26	8X7	400	PF3-1/2"
SB-V3-1SD		F-25	200	254	8-M16-24	300		102	119	166.5	263	280.5				500	PF4"
SB-V35-1SD		F-30	230	298	8-M20-30	350		122	138	195	333	369	34	32	10X8	630	PF5"
SB-V4-1SD		F-35	260	356	8-M30-45	410		133	150	209	345	394					PF6"
SB-V5-1SD		F-40	300	406	8-M36-55	475		166	177	246	426	426				710	
SB-V55-1SD		F-40	300	406	8-M36-55	475		171	192	262	441	446					
SB-V6-1SD		F-40	300	406	8-M36-55	475		185	201	283	498.5	498	44	38	12X8	800	PF8"
SB-V7-1SD	C	F-48	370	483	12-M36-55	560	5	206	222	309	519.5	526	44	38	12X8	900	PF8"
SB-V75-1SD		F-48	370	483	12-M36-55	560		221	248	340	628	666	58	50	16X10	1000	PF10"
SB-V8-1SD		F-48	370	483	12-M36-55	560		233	259	352	638	697	58	50	16X10	1000	PF10"
SB-V85-1SD	D	F-60	470	603	20-M36-55	700	5	248	278	373	658	741	58	50	16X10	1000	PF12"
SB-V9-1SD		F-60	470	603	20-M36-55	700		263	295	398	784	876	58	50	16X10	1000	PF12"
* SB-V10-1SD		F-80	670	813	20-M42-63	900		378	375	490	863	941					

Size and component specification in this catalogue are subject to change without prior notice for quality improvement.
* Mark has been changed and updated.

Feature >>>

- This series suitable for use with Gate & Globe type valve. Also sluice gates and any other type requiring linear motion for thrust and torque applications.
- Unique Top Entry Replaceable Stem Nut. High Tensile Aluminum bronze material providing corrosion and abrasion resistance.
- Castings are Ductile Iron, class 65-45-12 providing high strength and impact resistance.
- Heavy duty roller bearings supporting both radial & axial thrust loads.
- Gears are Machine cut, heat treated and ground for optimum operation Units are completely O-Ring Sealed suitable for temporary submergence to meet Ip67 class.
- Many options, such as hand wheels, chain wheels, stem covers, position dial indicators are available.

DIAL INDICATOR

A unique local position dial indicator is available.
It is graduated in percent from 0% (close) to 100% (open).

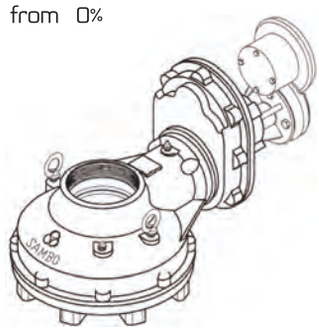

M·O·V OPTION

Bevel Gear can be provided with Motor actuator input flanges to accept standard ISO Mounting Base.

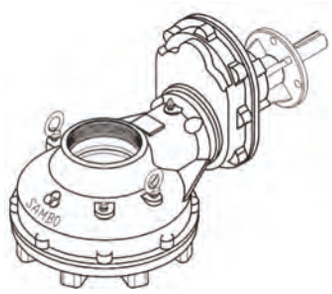

Selection Chart for Manual Operation >>>

SIZE / MODEL	MAX. GEAR RATIO (Changeable)	MAX. STEM ACCEPTANCE		BASE MOUNTING OPTION & STANDARD	MAX. THRUST CAPACITY		MAX. TORQUE CAPACITY		WEIGHT
		TW	KEY		KN	lbf	N–m	Ft . lbf	Kg
* SB–V0–1SD	20.86 : 1	46	38 (12X8)	F–10, F–12, F–14	127	28550	600	442	24
* SB–V1–1SD	22.46 : 1	55	45 (14X9)	F–14, F–16	141	31700	980	723	30
SB–V2–1SD	25.67 : 1	62	52 (16X10)	F–14, F–16, (F–20)	190	42710	1500	1106	42
SB–V3–1SD	32.08 : 1	72	60 (18X11)	F–16, (F–20), F–25	288	64750	2500	1844	54
SB–V35–1SD	49.5 : 1	85	72 (20X12)	F–25, F–30	350	78680	3500	2581	94
SB–V4–1SD	54 : 1	98	84 (22X14)	F–25, F–30, F–35	400	89920	5200	3835	116
SB–V5–1SD	80.31 : 1	110	95 (28X16)	F–25, F–30, F–35, F–40	510	114650	7800	5753	167
SB–V55–1SD	85.75 : 1	120	105 (28X16)	F–30, F–35, F–40	1500	337210	10400	7671	218
SB–V6–1SD	112 : 1	130	115 (32X18)	F–30, F–35, F–40	2310	519300	13000	9588	295
SB–V7–1SD	120.88 : 1	150	130 (36X20)	F–35, F–40, F–48	2500	562020	17600	12981	359
SB–V75–1SD	200 : 1	160	140 (36X20)	F–40, F–48	3450	775590	21000	15489	560
SB–V8–1SD	200 : 1	180	160 (40X22)	F–40, F–48	4100	921700	32000	23602	573
SB–V85–1SD	200 : 1	190	170 (40X22)	F–48, F–60	5150	1157760	40000	29502	918
SB–V9–1SD	200 : 1	200	180 (45X25)	F–48, F–60	5450	1225180	55000	40566	1255
* SB–V10–1SD	200 : 1	220	200 (50X28)	F–60, F–80	7300	1641105	75000	55317	1465

Size and component specification in this catalogue are subject to change without prior notice for quality improvement.
* Mark has been changed and updated.

STANDARD TYPE-A Twin Shaft

Thrust & Torque(Twin Shaft) Horizontal Input with Double Reduction Gear Attachment

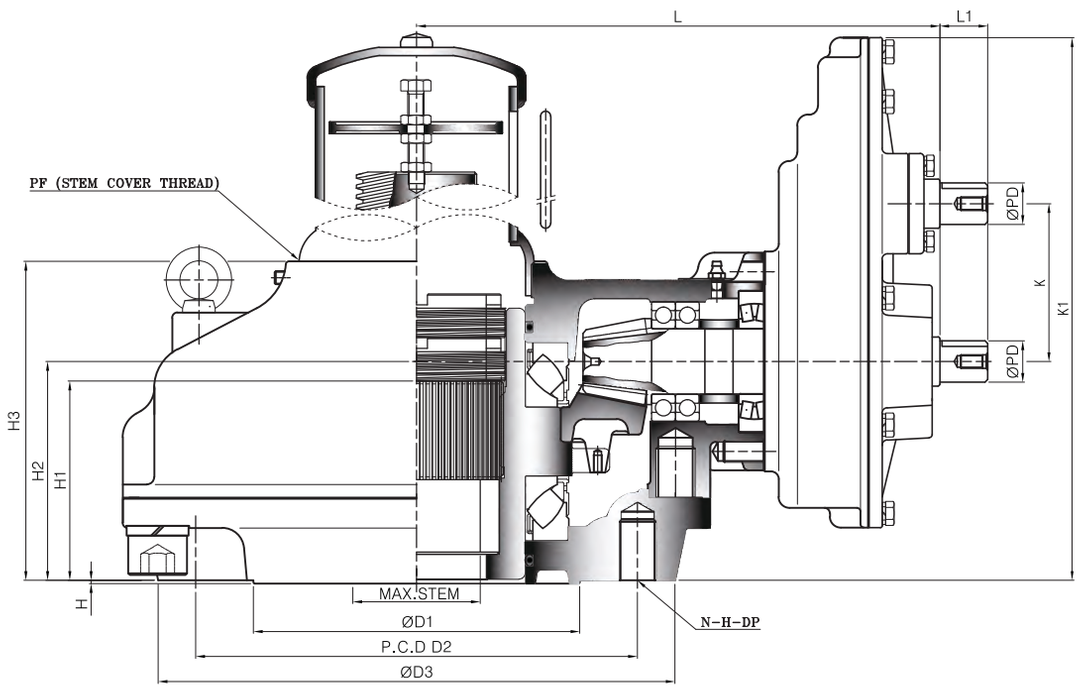

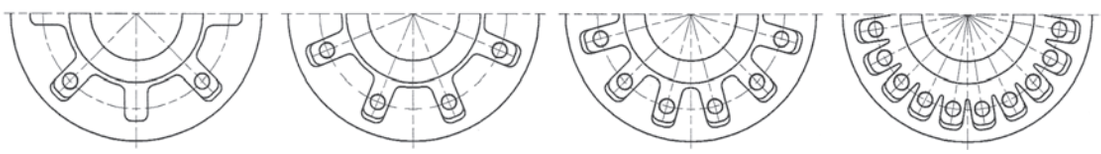

TYPE - A TYPE - B TYPE - C TYPE - D

Dimension >>>

UNIT : mm

DIM / MODEL	BASE PART							EXTERNAL PART						INPUT SHAFT PART			HAND WHEEL	STEM COVER
	TYPE	FLANGE	ØD1	P.C.D ØD2	P.C.D N-H-DP	ØD3	H	H1	H2	H3	K	K1	L	L1	ØPD	KEY		
* SB-V0-1SDT	A	F-14	100	140	4-M16-24	175	3	72	81	121	69	225	231	34	26	8X7	250	PF2-1/2"
* SB-V1-1SDT		F-16	130	165	4-M20-30	210		84	98	140	69	242	243.5				300	PF3"
SB-V2-1SDT	B	F-16 (F-20)	140	205	8-M16-24	250	3	95	115	159.5	69	259	260.5	34	26	8X7	400	PF3-1/2"
SB-V3-1SDT		F-25	200	254	8-M16-24	300		102	119	166.5	69	263	280.5				500	PF4"
SB-V35-1SDT		F-30	230	298	8-M20-30	350		122	138	195	93	333	369	34	32	10X8	630	PF5"
SB-V4-1SDT		F-35	260	356	8-M30-45	410		133	150	209	93	345	394					PF6"
SB-V5-1SDT		F-40	300	406	8-M36-55	475		161	177	245	121	426	426				710	
SB-V55-1SDT		F-40	300	406	8-M36-55	475		171	192	261	121	441	446					
SB-V6-1SDT		F-40	300	406	8-M36-55	475		185	201	283	145	498.5	498	44	38	12X8	800	PF8"
SB-V7-1SDT	C	F-48	370	483	12-M36-55	560	5	206	222	309	145	519.5	526	44	38	12X8	900	PF8"
SB-V75-1SDT		F-48	370	483	12-M36-55	560		221	248	340	186	628	666	58	50	16X10	1000	PF10"
SB-V8-1SDT		F-48	370	483	12-M36-55	560		233	259	352	186	638	697	58	50	16X10	1000	PF10"
SB-V85-1SDT	D	F-60	470	603	20-M36-55	700	5	248	278	373	186	658	741	58	50	16X10	1000	PF12"
SB-V9-1SDT		F-60	470	603	20-M36-55	700		263	295	398	238	784	876	58	50	16X10	1000	PF12"
* SB-V10-1SDT		F-80	670	813	20-M42-63	900		378	375	490	238	863	941					

Size and component specification in this catalogue are subject to change without prior notice for quality improvement.
* Mark has been changed and updated.

Feature >>>

- This series suitable for use with Gate & Globe type valve. Also sluice gates and any other type requiring linear motion for thrust and torque applications.
- Unique Top Entry Replaceable Stem Nut. High Tensile Aluminum bronze material providing corrosion and abrasion resistance.
- Castings are Ductile Iron, class 65-45-12 providing high strength and impact resistance.
- Heavy duty roller bearings supporting both radial & axial thrust loads.
- Gears are Machine cut, heat treated and ground for optimum operation Units are completely O-Ring Sealed suitable for temporary submergence to meet Ip67 class.
- Many options, such as hand wheels, chain wheels, stem covers, position dial indicators are available.

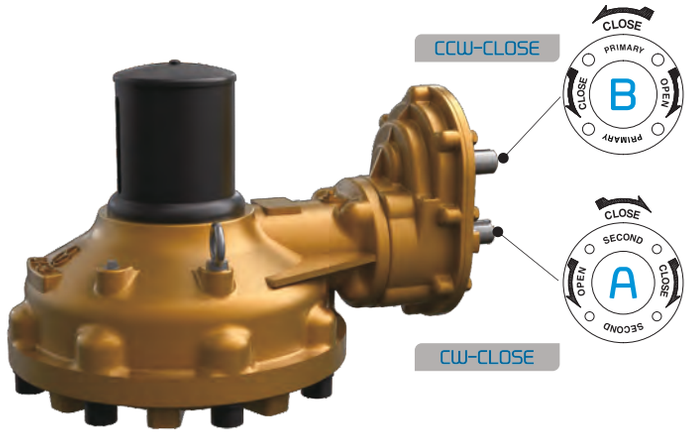

A. Second Input Shaft (Low Speed Input Shaft)
Provides maximum mechanical advantage for seating and unseating of valves.

B. Primary Input Shaft (High Speed Input Shaft)
Allow for less turns after valve has been unseating.

SAMBO
The World's Highest Quality!

Global Leader
SAMBO
SPIRAL BEVEL GEAR ACTUATORS
The World's Highest Quality!

Selection Chart for Manual Operation >>>

SIZE / MODEL	MAX.GEAR RATIO (Changeable)		MAX. STEM ACCEPTANCE		BASE MOUNTING OPTION & STANDARD	MAX. THRUST CAPACITY		MAX. TORQUE CAPACITY		WEIGHT
	PRIMARY	SECOND	TW	KEY		KN	lbf	N–m	Ft . lbf	Kg
* SB–V0–1SDT	8.23 : 1	20.86 : 1	46	38 (12X8)	F–10, F–12, F–14	127	28550	600	442	24
* SB–V1–1SDT	8.86 : 1	22.46 : 1	55	45 (14X9)	F–14, F–16	141	31700	980	723	30
SB–V2–1SDT	10.13 : 1	25.67 : 1	62	52 (16X10)	F–14, F–16, (F–20)	190	42710	1500	1106	42
SB–V3–1SDT	12.66 : 1	32.08 : 1	72	60 (18X11)	F–16, (F–20), F–25	288	64750	2500	1844	54
SB–V35–1SDT	16.5 : 1	49.5 : 1	85	72 (20X12)	F–25, F–30	350	78680	3500	2581	94
SB–V4–1SDT	18 : 1	54 : 1	98	84 (22X14)	F–25, F–30, F–35	400	89920	5200	3835	116
SB–V5–1SDT	22.94 : 1	80.31 : 1	110	95 (28X16)	F–25, F–30, F–35, F–40	510	114650	7800	5753	167
SB–V55–1SDT	24.5 : 1	85.75 : 1	120	105 (28X16)	F–30, F–35, F–40	1500	337210	10400	7671	218
SB–V6–1SDT	28 : 1	112 : 1	130	115 (32X18)	F–30, F–35, F–40	2310	519300	13000	9588	295
SB–V7–1SDT	30.22 : 1	120.88 : 1	150	130 (36X20)	F–35, F–40, F–48	2500	562020	17600	12981	359
SB–V75–1SDT	40 : 1	200 : 1	160	140 (36X20)	F–40, F–48	3450	775590	21000	15489	560
SB–V8–1SDT	40 : 1	200 : 1	180	160 (40X22)	F–40, F–48	4100	921700	32000	23602	573
SB–V85–1SDT	40 : 1	200 : 1	190	170 (40X22)	F–48, F–60	5150	1157760	40000	29502	918
SB–V9–1SDT	40 : 1	200 : 1	200	180 (45X25)	F–48, F–60	5450	1225180	55000	40566	1255
* SB–V10–1SDT	40 : 1	200 : 1	220	200 (50X28)	F–60, F–80	7300	1641105	75000	55317	1465

Size and component specification in this catalogue are subject to change without prior notice for quality improvement.
* Mark has been changed and updated.

SAMBO

STANDARD TYPE-B

Thrust & Torque Vertical Input with Single Reduction Gear Attachment

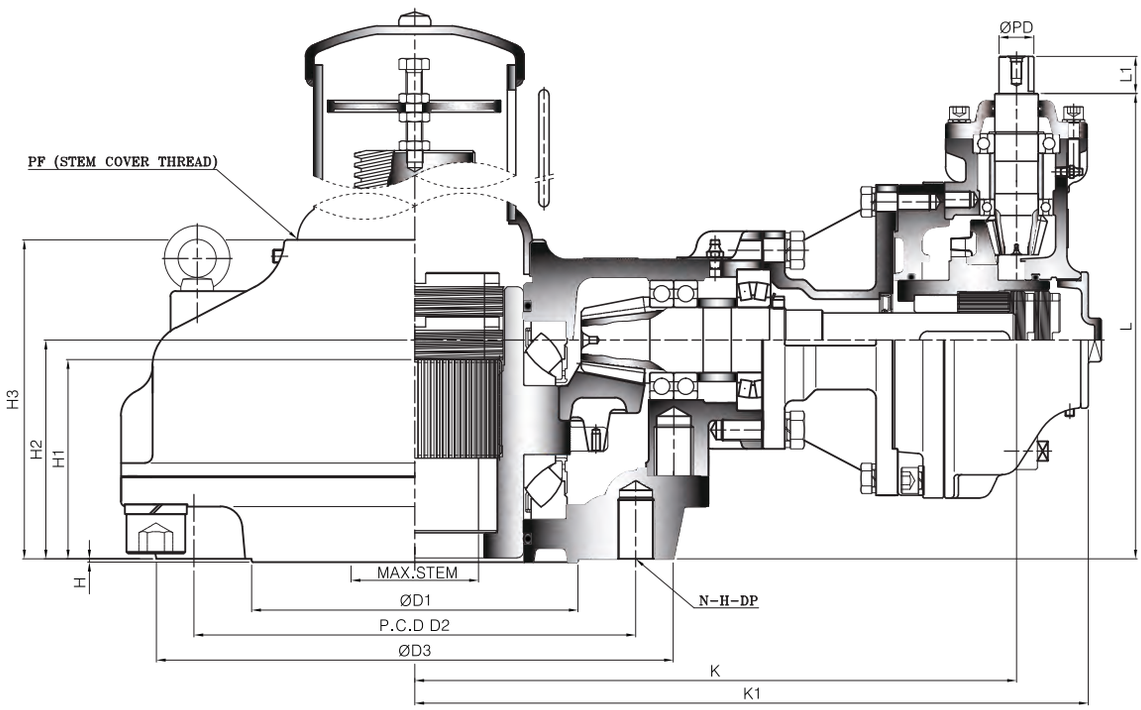

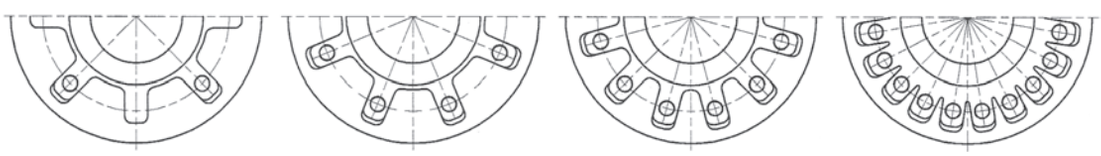

TYPE - A TYPE - B TYPE - C TYPE - D

Dimension >>>

UNIT : mm

DIM / MODEL	BASE PART							EXTERNAL PART						INPUT SHAFT PART			HAND WHEEL	STEM COVER
	TYPE	FLANGE	ØD1	P.C.D ØD2	P.C.D N-H-DP	ØD3	H	H1	H2	H3	K	K1	L	L1	ØPD	KEY		
SB-V0-2B	A	F-14	100	140	4-M16-24	175	3	72	81	121	244.5	278.5	170	34	26	8X7	250	PF2-1/2"
SB-V1-2B		F-16	130	165	4-M20-30	210		84	98	140	252	286	187				250	PF3"
SB-V2-2B	B	F-16 (F-20)	140	205	8-M16-24	250	3	95	115	159.5	299	340	236	34	26	8X7	300	PF3-1/2"
SB-V3-2B		F-25	200	254	8-M16-24	300		102	119	166.5	326.5	368	250				300	PF4"
SB-V35-2B		F-30	230	298	8-M20-30	350		122	138	195	415	474	292.5	34	32	10X8	400	PF5"
SB-V4-2B		F-35	260	356	8-M30-45	410		133	150	209	457	521	317				500	PF6"
SB-V5-2B		F-40	300	406	8-M36-55	475		161	177	245	419	488.5	365				630	
SB-V55-2B		F-40	300	406	8-M36-55	475		171	192	261	439	508.5	380					
SB-V6-2B		F-40	300	406	8-M36-55	475		185	201	283	482	557.5	409	34	32	10X8	710	PF8"
SB-V7-2B	C	F-48	370	483	12-M36-55	560	5	206	222	309	510	585.5	430	34	32	10X8	710	PF8"
* SB-V75-2B		F-48	370	483	12-M36-55	560		221	248	340	567	639	514	44	38	12X8	800	PF10"
SB-V8-2B		F-48	370	483	12-M36-55	560		233	259	352	608	670	524	44	38	12X8	800	PF10"
SB-V85-2B	D	F-60	470	603	20-M36-55	700	5	248	278	373	654	730	569	44	38	12X8	900	PF12"
SB-V9-2B		F-60	470	603	20-M36-55	700		263	295	398	749	833	630	44	38	12X8	900	PF12"
* SB-V10-2B		F-80	670	813	20-M42-63	900		378	375	490	845	938	750	58	50	16X10	1000	

Size and component specification in this catalogue are subject to change without prior notice for quality improvement.
* Mark has been changed and updated.

Feature >>>

- This series suitable for use with Gate & Globe type valve. Also sluice gates and any other type requiring linear motion for thrust and torque applications.
- Unique Top Entry Replaceable Stem Nut. High Tensile Aluminum bronze material providing corrosion and abrasion resistance.
- Castings are Ductile Iron, class 65-45-12 providing high strength and impact resistance.
- Heavy duty roller bearings supporting both radial & axial thrust loads.
- Gears are Machine cut, heat treated and ground for optimum operation Units are completely O-Ring Sealed suitable for temporary submergence to meet IP67 class.
- Many options, such as hand wheels, chain wheels, stem covers, position dial indicators are available.

DIAL INDICATOR

A unique local position dial indicator is available.
It is graduated in percent from 0% (close) to 100% (open).

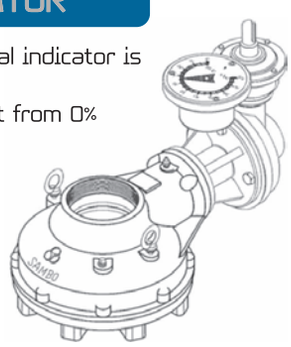

M·O·V OPTION

Bevel Gear can be provided with Motor actuator input flanges to accept standard ISO Mounting Base.

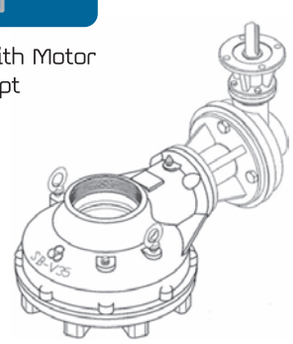

Selection Chart for Manual Operation >>>

SIZE / MODEL	GEAR RATIO	MAX. STEM ACCEPTANCE		BASE MOUNTING OPTION & STANDARD	MAX. THRUST CAPACITY		MAX. TORQUE CAPACITY		WEIGHT
		TW	KEY		KN	lbf	N–m	Ft . lbf	Kg
SB–V0–2B	6.5 : 1	46	38 (12X8)	F–10, F–12, F–14	127	28550	600	442	23
SB–V1–2B	7 : 1	55	45 (14X9)	F–14, F–16	141	31700	980	723	29
SB–V2–2B	10 : 1	62	52 (16X10)	F–14, F–16, (F–20)	190	42710	1500	1106	42
SB–V3–2B	15 : 1	72	60 (18X11)	F–16, (F–20), F–25	288	64750	2500	1844	56
SB–V35–2B	17.87 : 1	85	72 (20X12)	F–25, F–30	350	78680	3500	2581	93
SB–V4–2B	21 : 1	98	84 (22X14)	F–25, F–30, F–35	400	89920	5200	3835	121
SB–V5–2B	26.22 : 1	110	95 (28X16)	F–25, F–30, F–35, F–40	510	114650	7800	5753	184
SB–V55–2B	28 : 1	120	105 (28X16)	F–30, F–35, F–40	1500	337210	10400	7671	235
SB–V6–2B	35 : 1	130	115 (32X18)	F–30, F–35, F–40	2310	519300	13000	9588	297
SB–V7–2B	37.77 : 1	150	130 (36X20)	F–35, F–40, F–48	2500	562020	17600	12981	362
* SB–V75–2B	44 : 1	160	140 (36X20)	F–40, F–48	3450	775590	21000	15489	538
SB–V8–2B	44 : 1	180	160 (40X22)	F–40, F–48	4100	921700	32000	23602	551
SB–V85–2B	48 : 1	190	170 (40X22)	F–48, F–60	5150	1157760	40000	29502	631
SB–V9–2B	52.44 : 1	200	180 (45X25)	F–48, F–60	5450	1225180	55000	40566	890
* SB–V10–2B	56 : 1	220	200 (50X28)	F–60, F–80	7300	1641105	75000	55317	1121

Size and component specification in this catalogue are subject to change without prior notice for quality improvement.
* Mark has been changed and updated.

SAMBO

STANDARD TYPE-B

Thrust & Torque Vertical Input with Double Reduction Gear Attachment

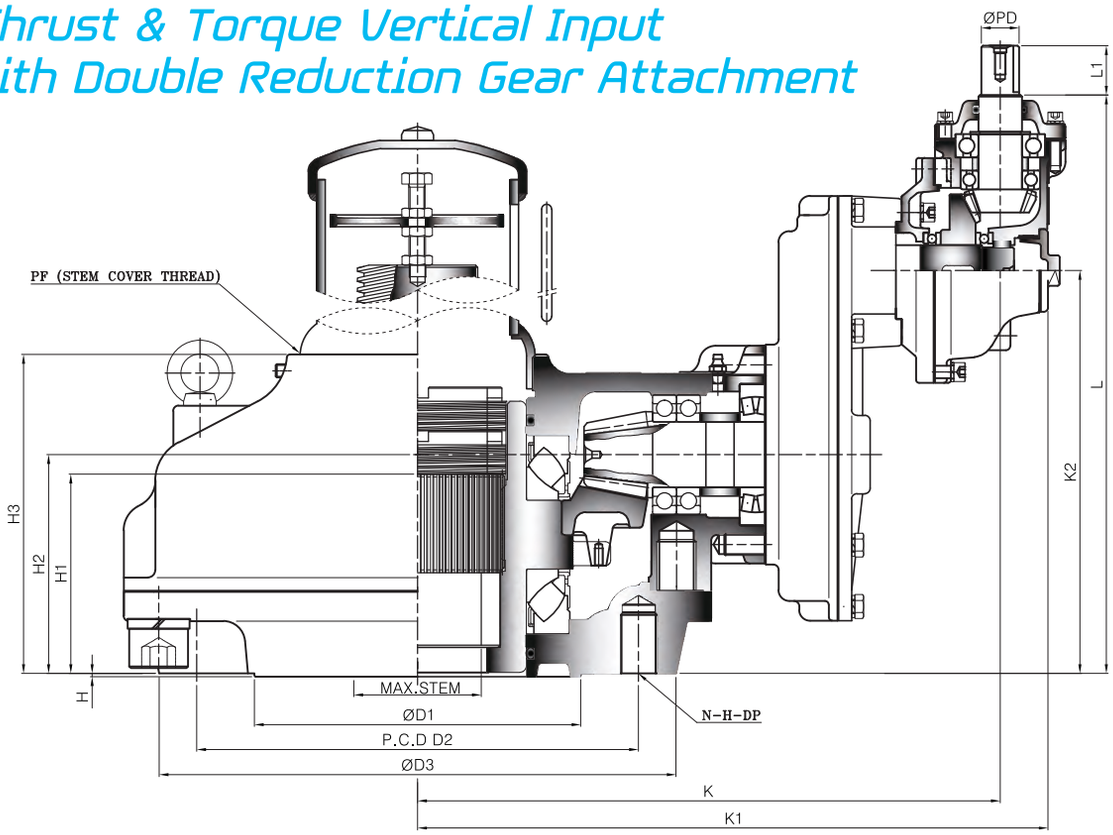

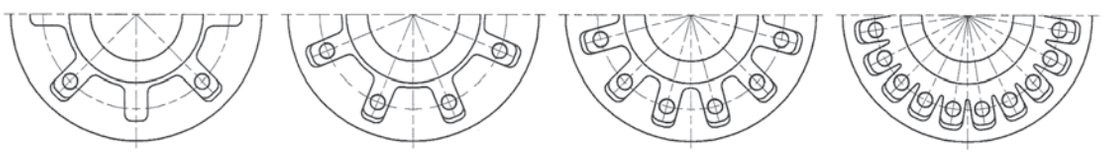

TYPE - A TYPE - B TYPE - C TYPE - D

Dimension >>>

UNIT : mm

DIM / MODEL	BASE PART							EXTERNAL PART							INPUT SHAFT PART			HAND WHEEL	STEM COVER
	TYPE	FLANGE	ØD1	P.C.D ØD2	P.C.D N-H-DP	ØD3	H	H1	H2	H3	K	K1	K2	L	L1	ØPD	KEY		
SB-V0-1S2B	A	F-14	100	140	4-M16-24	175	3	72	81	121	242.5	282.5	160	249	34	26	8X7	250	PF2-1/2"
SB-V1-1S2B		F-16	130	165	4-M20-30	210		84	98	140	255	295	177	266				250	PF3"
SB-V2-1S2B	B	F-16 (F-20)	140	205	8-M16-24	250	3	95	115	159.5	277.5	317.5	208	297	34	26	8X7	250	PF3-1/2"
SB-V3-1S2B		F-25	200	254	8-M16-24	300		102	119	166.5	297.5	337.5	212	301				250	PF4"
SB-V35-1S2B		F-30	230	298	8-M20-30	350		122	138	195	390	435	259	380	34	26	8X7	300	PF5"
SB-V4-1S2B		F-35	260	356	8-M30-45	410		133	150	209	416	466	271	392				300	PF6"
SB-V5-1S2B		F-40	300	406	8-M36-55	475		161	177	245	446	491	322	443				300	
SB-V55-1S2B		F-40	300	406	8-M36-55	475		171	192	261	466	511	337	458				300	
SB-V6-1S2B		F-40	300	406	8-M36-55	475		185	201	283	539.5	589.5	370	501	34	26	8X7	400	PF8"
SB-V7-1S2B	C	F-48	370	483	12-M36-55	560	5	206	222	309	567.5	617.5	391	522	34	26	8X7	400	PF8"
* SB-V75-1S2B		F-48	370	483	12-M36-55	560		221	248	340	722.5	787.5	478	666	34	32	10X8	500	PF10"
SB-V8-1S2B		F-48	370	483	12-M36-55	560		233	259	352	753.5	818.5	488	676	34	32	10X8	500	PF10"
SB-V85-1S2B	D	F-60	470	603	20-M36-55	700	5	248	278	373	837	902	508	716	34	32	10X8	630	PF12"
SB-V9-1S2B		F-60	470	603	20-M36-55	700		263	295	398	970	1035	580	788	34	32	10X8	630	PF12"
* SB-V10-1S2B		F-80	670	813	20-M42-63	900		378	375	490	1053	1135.5	659	925	44	38	12X8	710	

Size and component specification in this catalogue are subject to change without prior notice for quality improvement.
* Mark has been changed and updated.

Feature >>>

- This series suitable for use with Gate & Globe type valve. Also sluice gates and any other type requiring linear motion for thrust and torque applications.
- Unique Top Entry Replaceable Stem Nut. High Tensile Aluminum bronze material providing corrosion and abrasion resistance.
- Castings are Ductile Iron, class 65-45-12 providing high strength and impact resistance.
- Heavy duty roller bearings supporting both radial & axial thrust loads.
- Gears are Machine cut, heat treated and ground for optimum operation Units are completely O-Ring Sealed suitable for temporary submergence to meet IP67 class.
- Many options, such as hand wheels, chain wheels, stem covers, position dial indicators are available.

DIAL INDICATOR

A unique local position dial indicator is available.
It is graduated in percent from 0% (close) to 100% (open).

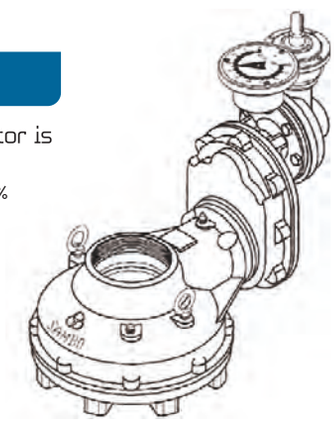

M·O·V OPTION

Bevel Gear can be provided with Motor actuator input flanges to accept standard ISO Mounting Base.

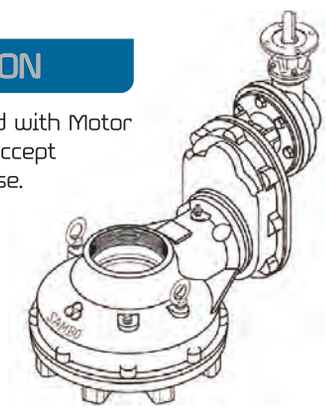

Selection Chart for Manual Operation >>>

SIZE / MODEL	GEAR RATIO	MAX. STEM ACCEPTANCE		BASE MOUNTING OPTION & STANDARD	MAX. THRUST CAPACITY		MAX. TORQUE CAPACITY		WEIGHT
		TW	KEY		KN	lbf	N–m	Ft . lbf	Kg
SB–V0–1S2B	13 : 1	46	38 (12X8)	F–10, F–12, F–14	127	28550	600	442	25
SB–V1–1S2B	14 : 1	55	45 (14X9)	F–14, F–16	141	31700	980	723	31
SB–V2–1S2B	20.26 : 1	62	52 (16X10)	F–14, F–16, (F–20)	190	42710	1500	1106	46
SB–V3–1S2B	25.32 : 1	72	60 (18X11)	F–16, (F–20), F–25	288	64750	2500	1844	57
SB–V35–1S2B	41.25 : 1	85	72 (20X12)	F–25, F–30	350	78680	3500	2581	98
SB–V4–1S2B	45 : 1	98	84 (22X14)	F–25, F–30, F–35	400	89920	5200	3835	119
SB–V5–1S2B	57.36 : 1	110	95 (28X16)	F–25, F–30, F–35, F–40	510	114650	7800	5753	171
SB–V55–1S2B	61.25 : 1	120	105 (28X16)	F–30, F–35, F–40	1500	337210	10400	7671	226
SB–V6–1S2B	84 : 1	130	115 (32X18)	F–30, F–35, F–40	2310	519300	13000	9588	291
SB–V7–1S2B	90.67 : 1	150	130 (36X20)	F–35, F–40, F–48	2500	562020	17600	12981	356
* SB–V75–1S2B	160 : 1	160	140 (36X20)	F–40, F–48	3450	775590	21000	15489	566
SB–V8–1S2B	160 : 1	180	160 (40X22)	F–40, F–48	4100	921700	32000	23602	573
SB–V85–1S2B	200 : 1	190	170 (40X22)	F–48, F–60	5150	1157760	40000	29502	644
SB–V9–1S2B	200 : 1	200	180 (45X25)	F–48, F–60	5450	1225180	55000	40566	873
* SB–V10–1S2B	220 : 1	220	200 (50X28)	F–60, F–80	7300	1641105	75000	55317	1057

Size and component specification in this catalogue are subject to change without prior notice for quality improvement.
* Mark has been changed and updated.

STANDARD TYPE-C Torque only Lug Drive
Horizontal Input

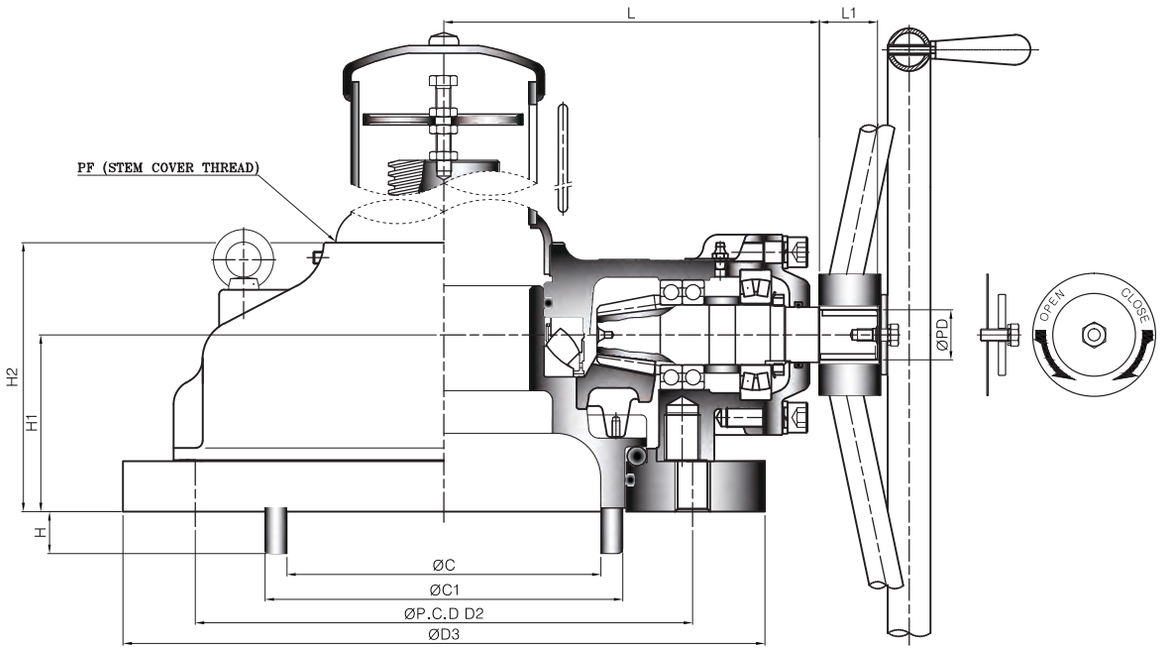

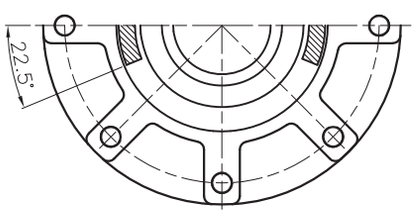

TYPE - A

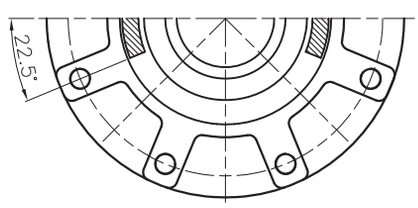

TYPE - B

Dimension >>>

UNIT : mm

DIM / MODEL	BASE PART					CLAMP PART			EXTERNAL PART			INPUT SHAFT PART			HAND WHEEL	STEM COVER
	TYPE	FLANGE	P.C.D ØD2	P.C.D N-H-DP	ØD3	ØC	ØC1	H	H1	H2	L	L1	ØPD	KEY		
SB-VS10C	A	F-14	140	8-3/8"-16UNC	190	74	87	10	72	96	121	34	26	8X7	300	PF2"
		F-16	165	8-1/2"-13UNC												
SB-VS20C		F-16	165	8-1/2"-13UNC	220	91	105	11	73	100	131				300	PF2-1/2"
		(F-20)	193.8													
SB-V0C		F-16	165	8-1/2"-13UNC	220	110	126	14	75	115	155	34	32	10X8	400	
		(F-20)	193.8													
SB-V1C		(F-20)	193.8	8-1/2"-13UNC	300	128	146	17	90	132	167				500	PF3"
		F-25	254	8-5/8"-11UNC												
SB-V2C	B	F-25	254	8-5/8"-11UNC	350	146	166	19	107	152	188	34	32	10X8	630	PF3-1/2"
		F-30	298	8-3/4"-10UNC												
SB-V3C		F-30	298	8-3/4"-10UNC	415	173	197	21	110	158	209				710	PF4"
		F-35	356	8-1"-8UNC												
SB-V35C		F-35	356	8-1"-8UNC	475	220	247	23	122	184	266	44	38	12X8	800	PF5"
		F-40	406	8-1 1/4"-7UNC												
SB-V4C		F-35	356	8-1"-8UNC	475	258	292	25	145	202	291				900	PF6"
		F-40	406	8-1 1/4"-7UNC												
SB-V5C		F-35	356	8-1"-8UNC	480	266	306	27	172	242	334					
		F-40	406	8-1 1/4"-7UNC												

Size and component specification in this catalogue are subject to change without prior notice for quality improvement.
* Mark has been changed and updated.

Feature >>>

- This series suitable for use with Gate & Globe type valve. Also sluice gates and any other type requiring linear motion for thrust and torque applications.
- Unique Top Entry Replaceable Stem Nut. High Tensile Aluminum bronze material providing corrosion and abrasion resistance.
- Castings are Ductile Iron, class 65-45-12 providing high strength and impact resistance.
- Heavy duty roller bearings supporting both radial & axial thrust loads.
- Gears are Machine cut, heat treated and ground for optimum operation Units are completely O-Ring Sealed suitable for temporary submergence to meet IP67 class.
- Many options, such as hand wheels, chain wheels, stem covers, position dial indicators are available.

MOUNTING BASE

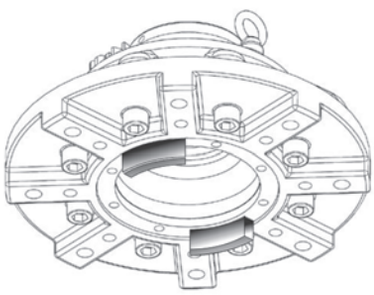

DIAL INDICATOR

A unique local position dial indicator is available. It is graduated in percent from 0% (close) to 100% (open).

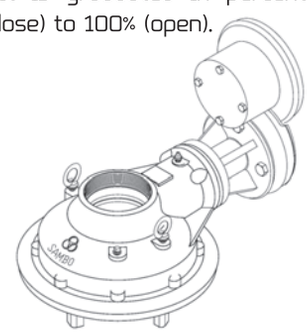

M·O·V OPTION

Bevel Gear can be provided with Motor actuator input flanges to accept standard ISO Mounting Base.

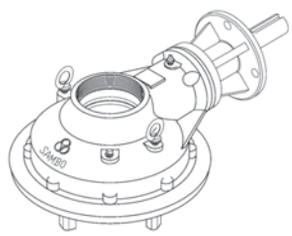

Selection Chart for Manual Operation >>>

SIZE / MODEL	GEAR RATIO	MAX. STEM ACCEPTANCE	MAX. TORQUE CAPACITY		WEIGHT
			N–m	Ft. lbf	Kg
SB–VS10C	2.5 : 1	42	330	243	7.5
SB–VS20C	3 : 1	50	555	409	10
SB–V0C	3.25 : 1	60	900	663	14.5
SB–V1C	3.5 : 1	69	1470	1084	21
SB–V2C	4 : 1	79	2250	1659	29
SB–V3C	5 : 1	97	3750	2765	45
SB–V35C	5.5 : 1	115	5250	3872	72
SB–V4C	6 : 1	130	7800	5752	91
SB–V5C	6.5 : 1	145	11700	8629	123

Size and component specification in this catalogue are subject to change without prior notice for quality improvement.
* Mark has been changed and updated.

STANDARD TYPE-C Torque only Lug Drive

Horizontal Input
with Single Reduction Gear Attachment

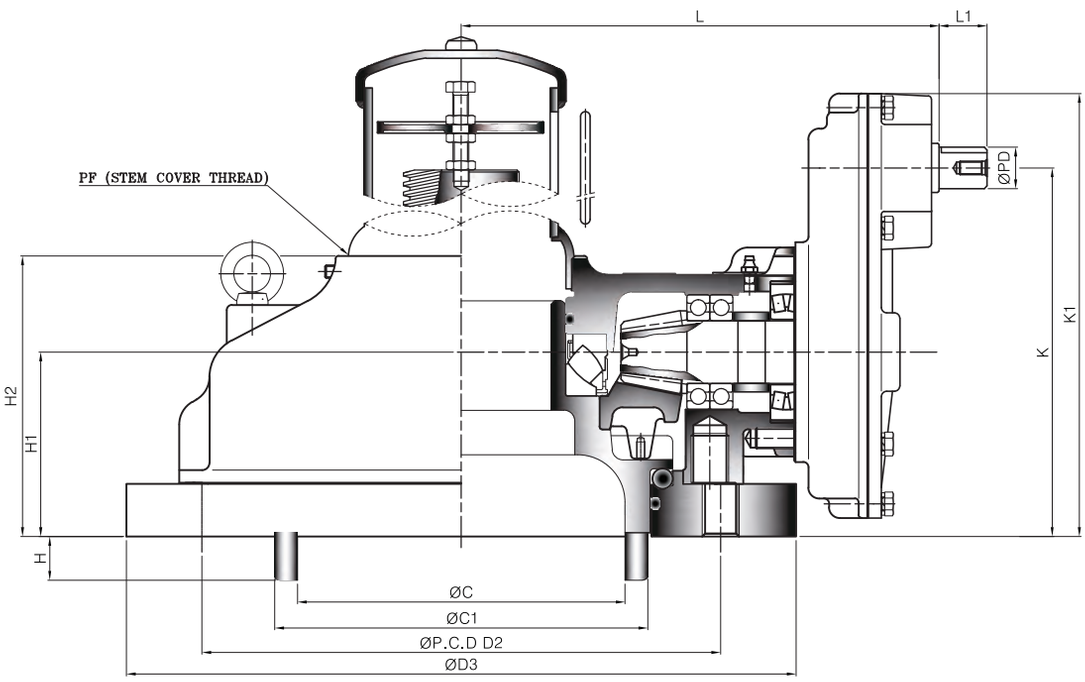

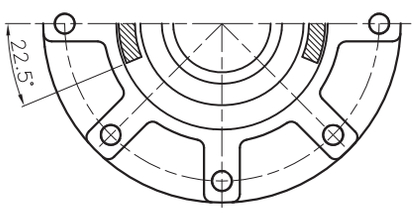

TYPE - A

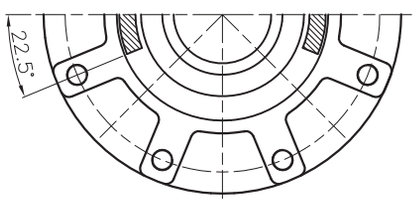

TYPE - B

Dimension >>>

UNIT : mm

MODEL \ DIM	BASE PART					CLAMP PART			EXTERNAL PART					INPUT SHAFT PART			HAND WHEEL	STEM COVER
	TYPE	FLANGE	P.C.D ØD2	P.C.D N–H–DP	ØD3	ØC	ØC1	H	H1	H2	K	K1	L	L1	ØPD	KEY		
SB–VS10C–1S	A	F–14	140	8–3/8"–16UNC	190	74	87	10	72	96	151	194	174	34	26	8X7	250	PF2"
		F–16	165	8–1/2"–13UNC														
SB–VS20C–1S		F–16	165	8–1/2"–13UNC	220	91	105	11	73	100	151	195	184					PF2–1/2"
		(F–20)	193.8															
SB–V0C–1S		F–16	165	8–1/2"–13UNC	220	110	126	14	75	115	154	197	202	34	26	8X7	300	
		(F–20)	193.8															
SB–V1C–1S		(F–20)	193.8	8–1/2"–13UNC	300	128	146	17	90	132	169	212	214					PF3"
		F–25	254	8–5/8"–11UNC														
SB–V2C–1S	B	F–25	254	8–5/8"–11UNC	350	146	166	19	107	152	200	248	237	34	26	8X7	400	PF3–1/2"
		F–30	298	8–3/4"–10UNC														
SB–V3C–1S		F–30	298	8–3/4"–10UNC	415	173	197	21	110	158	204	251	257				500	PF4"
		F–35	356	8–1"–8UNC														
SB–V35C–1S		F–35	356	8–1"–8UNC	475	220	247	23	122	184	249	305	333	34	32	10X8	630	PF5"
		F–40	406	8–1 1/4"–7UNC														
SB–V4C–1S		F–35	356	8–1"–8UNC	475	258	292	25	145	202	260	317	358					PF6"
		F–40	406	8–1 1/4"–7UNC														
SB–V5C–1S		F–35	356	8–1"–8UNC	480	266	306	27	172	242	293	350	401				710	
		F–40	406	8–1 1/4"–7UNC														

Size and component specification in this catalogue are subject to change without prior notice for quality improvement.
* Mark has been changed and updated.

Feature >>>

- This series suitable for use with Gate & Globe type valve. Also sluice gates and any other type requiring linear motion for thrust and torque applications.
- Unique Top Entry Replaceable Stem Nut. High Tensile Aluminum bronze material providing corrosion and abrasion resistance.
- Castings are Ductile Iron, class 65-45-12 providing high strength and impact resistance.
- Heavy duty roller bearings supporting both radial & axial thrust loads.
- Gears are Machine cut, heat treated and ground for optimum operation Units are completely O-Ring Sealed suitable for temporary submergence to meet IP67 class.
- Many options, such as hand wheels, chain wheels, stem covers, position dial indicators are available.

MOUNTING BASE

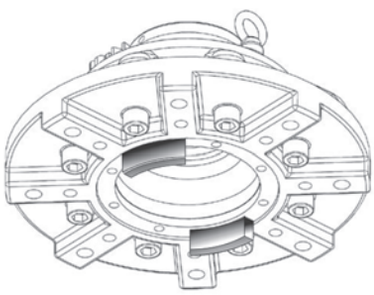

DIAL INDICATOR

A unique local position dial indicator is available. It is graduated in percent from 0% (close) to 100% (open).

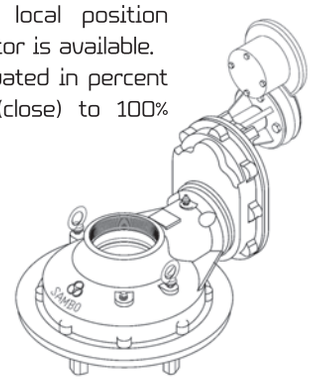

M·O·V OPTION

Bevel Gear can be provided with Motor actuator input flanges to accept standard ISO Mounting Base.

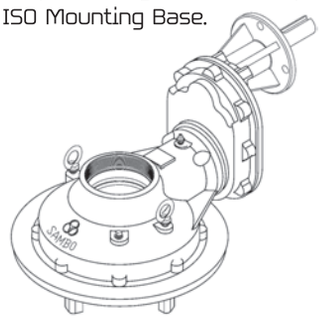

Selection Chart for Manual Operation >>>

SIZE / MODEL	GEAR RATIO	MAX. STEM ACCEPTANCE	MAX. TORQUE CAPACITY		WEIGHT
			N–m	Ft . lbf	Kg
SB–VS10C–1S	5 : 1	42	330	243	9.5
SB–VS20C–1S	6 : 1	50	555	409	12.5
SB–V0C–1S	6.5 : 1	60	900	663	25
SB–V1C–1S	7 : 1	69	1470	1084	32
SB–V2C–1S	10.13 : 1	79	2250	1659	45
SB–V3C–1S	12.66 : 1	97	3750	2765	60
SB–V35C–1S	16.5 : 1	115	5250	3872	95
SB–V4C–1S	18 : 1	130	7800	5752	120
SB–V5C–1S	19.5 : 1	145	11700	8629	135

Size and component specification in this catalogue are subject to change without prior notice for quality improvement.
* Mark has been changed and updated.

STANDARD TYPE-D Multiple Input Shaft
Thrust & Torque Vertical Input

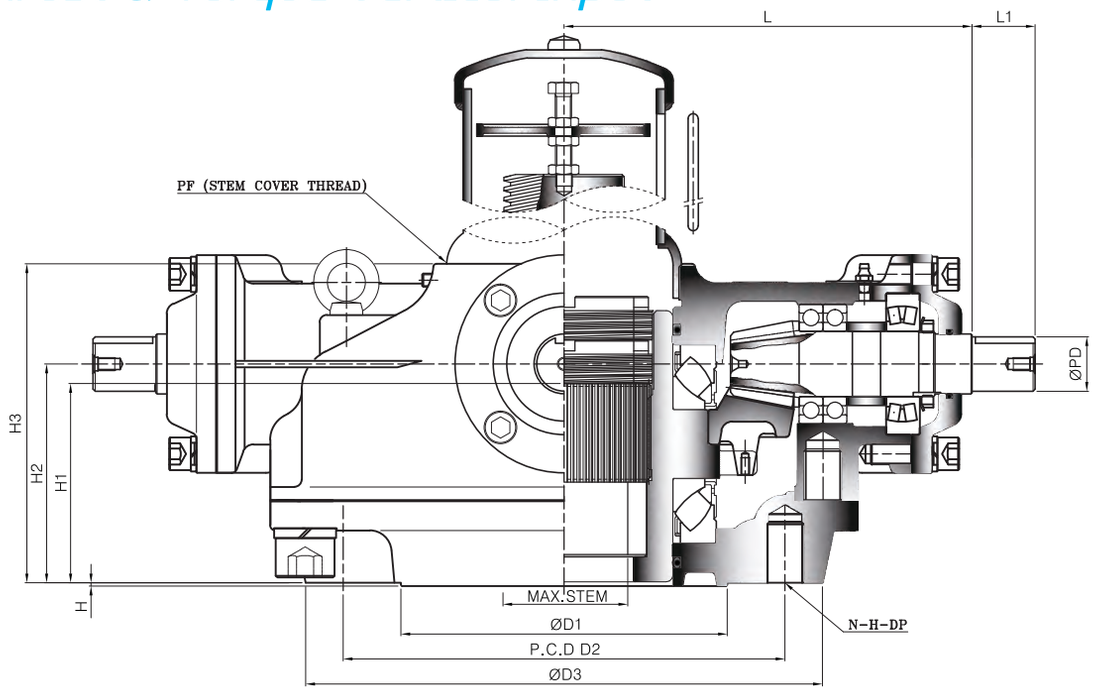

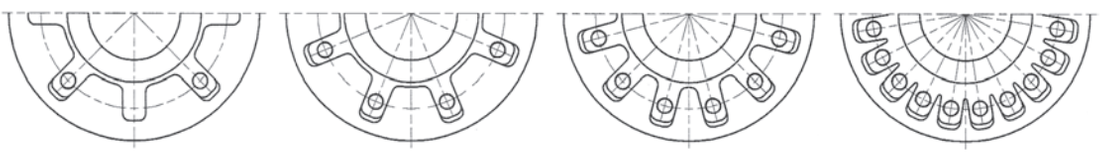

TYPE - A TYPE - B TYPE - C TYPE - D

Dimension >>>

UNIT : mm

MODEL \ DIM	BASE PART							EXTERNAL PART				INPUT SHAFT PART			HAND WHEEL	STEM COVER
	TYPE	FLANGE	ØD1	P.C.D ØD2	P.C.D N-H-DP	ØD3	H	H1	H2	H3	L	L1	ØPD	KEY		
SB-VS10W	A	F-10	70	102	4-M10-15	125	3	56	71	95	121	34	26	8X7	250	PF2"
SB-VS20W		F-12	85	125	4-M12-18	150		63	78.5	106	131				300	PF2-1/2"
SB-V0W		F-14	100	140	4-M16-24	175		72	81	121	154.5	34	32	10X8	400	
SB-V1W		F-16	130	165	4-M20-30	210		84	98	140	167				500	PF3"
SB-V2W	B	F-16 (F-20)	140	205	8-M16-24	250	3	95	115	159.5	188	34	32	10X8	630	PF3-1/2"
SB-V3W		F-25	200	254	8-M16-24	300		102	119	166.5	208				710	PF4"
SB-V35W		F-30	230	298	8-M20-30	350		122	138	195	266	44	38	12X8	800	PF5"
SB-V4W		F-35	260	356	8-M30-45	410		133	150	209	291				900	PF6"
SB-V5W		F-40	300	406	8-M36-55	475		161	177	245	313					
SB-V55W		F-40	300	406	8-M36-55	475		171	192	261	333					
SB-V6W		F-40	300	406	8-M36-55	475		185	201	283	381	58	50	16X10	1000	PF8"
SB-V7W	C	F-48	370	483	12-M36-55	560	5	206	222	309	409	58	50	16X10	1000	PF8"
SB-V75W		F-48	370	483	12-M36-55	560		221	248	340	441	58	50	16X10	1000	PF10"
SB-V8W		F-48	370	483	12-M36-55	560		233	259	352	472					
SB-V85W	D	F-60	470	603	20-M36-55	700	5	248	278	373	525	58	50	16X10	1000	PF12"
SB-V9W		F-60	470	603	20-M36-55	700		263	295	398	591	58	50	16X10	1000	PF12"
* SB-V10W		F-80	670	813	20-M42-63	900		378	375	490	664					

Size and component specification in this catalogue are subject to change without prior notice for quality improvement.
* Mark has been changed and updated.

Dual Gear Actuator Type (Manual Dial Indicator) >>>

: Typical Arrangement for Two Spindles Application

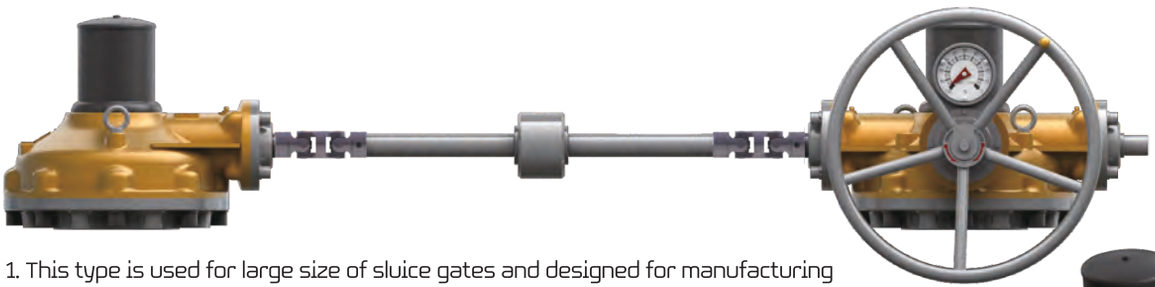

1. This type is used for large size of sluice gates and designed for manufacturing type to operate efficiently using 2 spindles.
2. Local dial position indicator provides clear indication of gate position.
3. Sambo can provide suitable interconnecting shafts and couplings if required. (Customer must state the center distance between the gate stems.)

Dual Gear Actuator Type (Electric Actuators) >>>

: Typical Arrangement for Two Spindles Application

1. This type is used for large size of sluice gates and designed for manufacturing type to operate efficiently using 2 spindles.
2. Sambo can provide suitable interconnecting shafts and couplings if required. (Customer must state the center distance between the gate stems.)

Selection Chart for Manual Operation >>>

SIZE / MODEL	GEAR RATIO	MAX. STEM ACCEPTANCE		BASE MOUNTING OPTION & STANDARD	MAX. THRUST CAPACITY		MAX. TORQUE CAPACITY		WEIGHT
		TW	KEY		KN	lbf	N–m	Ft . lbf	Kg
SB–VS10W	2.5 : 1	30	22 (8X7)	F–07, F–10	75.5	16970	220	162	10
SB–VS20W	3 : 1	40	32 (10X8)	F–10, F–12	113	25400	370	273	13
SB–V0W	3.25 : 1	46	38 (12X8)	F–10, F–12, F–14	127	28550	600	442	19
SB–V1W	3.5 : 1	55	45 (14X9)	F–14, F–16	141	31700	980	723	25
SB–V2W	4 : 1	62	52 (16X10)	F–14, F–16, (F–20)	190	42710	1500	1106	37
SB–V3W	5 : 1	72	60 (18X11)	F–16, (F–20), F–25	288	64750	2500	1844	49
SB–V35W	5.5 : 1	85	72 (20X12)	F–25, F–30	350	78680	3500	2581	84
SB–V4W	6 : 1	98	84 (22X14)	F–25, F–30, F–35	400	89920	5200	3835	106
SB–V5W	6.56 : 1	110	95 (28X16)	F–25, F–30, F–35, F–40	510	114650	7800	5753	159
SB–V55W	7 : 1	120	105 (28X16)	F–30, F–35, F–40	1500	337210	10400	7671	210
SB–V6W	7 : 1	130	115 (32X18)	F–30, F–35, F–40	2310	519300	13000	9588	263
SB–V7W	7.56 : 1	150	130 (36X20)	F–35, F–40, F–48	2500	562020	17600	12981	330
SB–V75W	8 : 1	160	140 (36X20)	F–40, F–48	3450	775590	21000	15489	473
SB–V8W	8 : 1	180	160 (40X22)	F–40, F–48	4100	921700	32000	23602	488
SB–V85W	8 : 1	190	170 (40X22)	F–48, F–60	5150	1157760	40000	29502	550
SB–V9W	8 : 1	200	180 (45X25)	F–48, F–60	5450	1225180	55000	40566	758
* SB–V10W	8 : 1	220	200 (50X28)	F–60, F–80	7300	1641105	75000	55317	916

Size and component specification in this catalogue are subject to change without prior notice for quality improvement.
* Mark has been changed and updated.

STANDARD TYPE-D Multiple Input Shaft
Thrust & Torque Horizontal Input with Single Reduction Gear Attachment

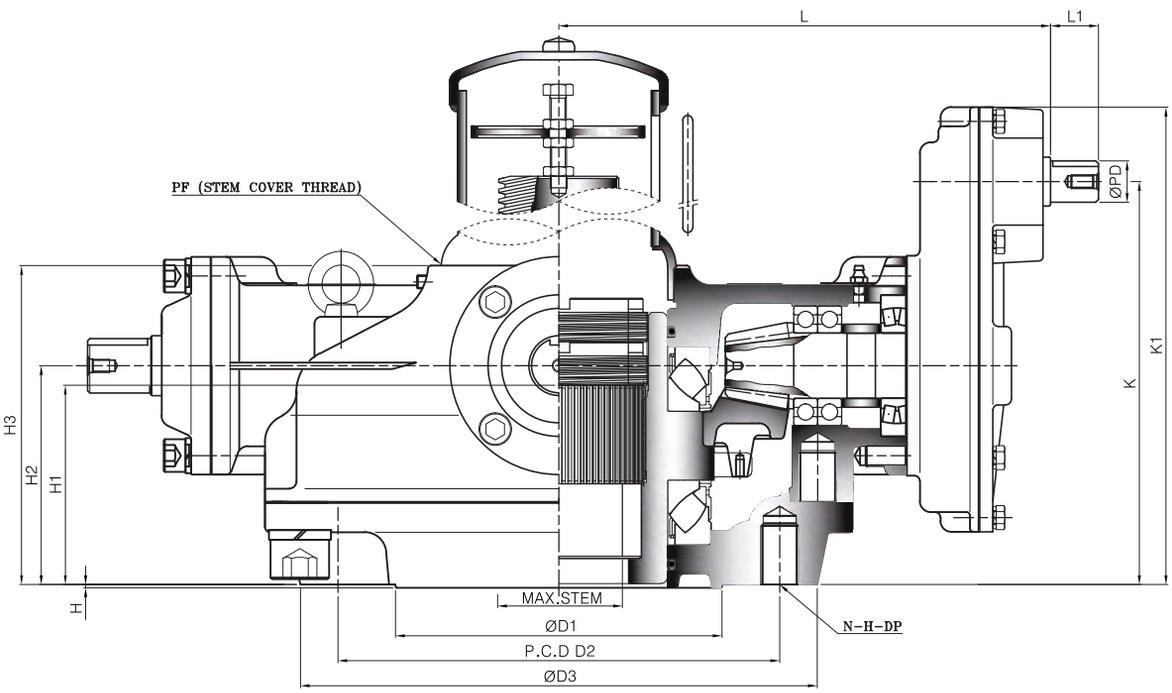

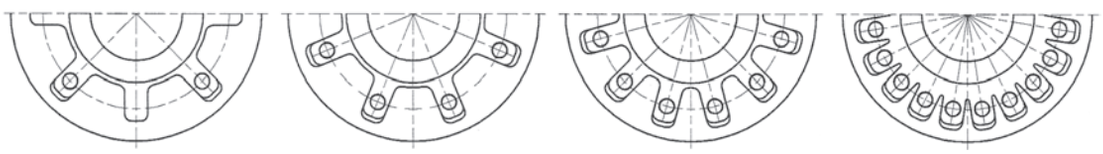

TYPE - A TYPE - B TYPE - C TYPE - D

Dimension >>>

UNIT : mm

DIM / MODEL	BASE PART							EXTERNAL PART						INPUT SHAFT PART			HAND WHEEL	STEM COVER
	TYPE	FLANGE	ØD1	P.C.D ØD2	P.C.D N-H-DP	ØD3	H	H1	H2	H3	K	K1	L	L1	ØPD	KEY		
SB-V0W-1S	A	F-14	100	140	4-M16-24	175	3	72	81	121	160	203	201.5	34	26	8X7	250	PF2-1/2"
SB-V1W-1S		F-16	130	165	4-M20-30	210		84	98	140	177	220	214				300	PF3"
SB-V2W-1S	B	F-16 (F-20)	140	205	8-M16-24	250	3	95	115	159.5	208	256	236.5	34	26	8X7	400	PF3-1/2"
SB-V3W-1S		F-25	200	254	8-M16-24	300		102	119	166.5	212	260	256.5				500	PF4"
SB-V35W-1S		F-30	230	298	8-M20-30	350		122	138	195	259	316	333	34	32	10X8	630	PF5"
SB-V4W-1S		F-35	260	356	8-M30-45	410		133	150	209	271	328	358					PF6"
SB-V5W-1S		F-40	300	406	8-M36-55	475		161	177	245	322	384.5	387				710	PF6"
SB-V55W-1S		F-40	300	406	8-M36-55	475		171	192	261	337	399.5	407					
SB-V6W-1S		F-40	300	406	8-M36-55	475		185	201	283	370	439	472	44	38	12X8	800	PF8"
SB-V7W-1S	C	F-48	370	483	12-M36-55	560	5	206	222	309	391	459	497	44	38	12X8	900	PF8"
SB-V75W-1S		F-48	370	483	12-M36-55	560		221	248	340	478	564	620	58	50	16X10	1000	PF10"
SB-V8W-1S		F-48	370	483	12-M36-55	560		233	259	352	489	575	651					
SB-V85W-1S	D	F-60	470	603	20-M36-55	700	5	248	278	373	508	594	695	58	50	16X10	1000	PF12"
SB-V9W-1S		F-60	470	603	20-M36-55	700		263	295	398	580	696	821	58	50	16X10	1000	PF12"
* SB-V10W-1S		F-80	670	813	20-M42-63	900		378	375	490	659	775	886					

Size and component specification in this catalogue are subject to change without prior notice for quality improvement.
* Mark has been changed and updated.

Dual Gear Actuator Type (Manual) >>>

: Typical Arrangement for Two Spindles Application

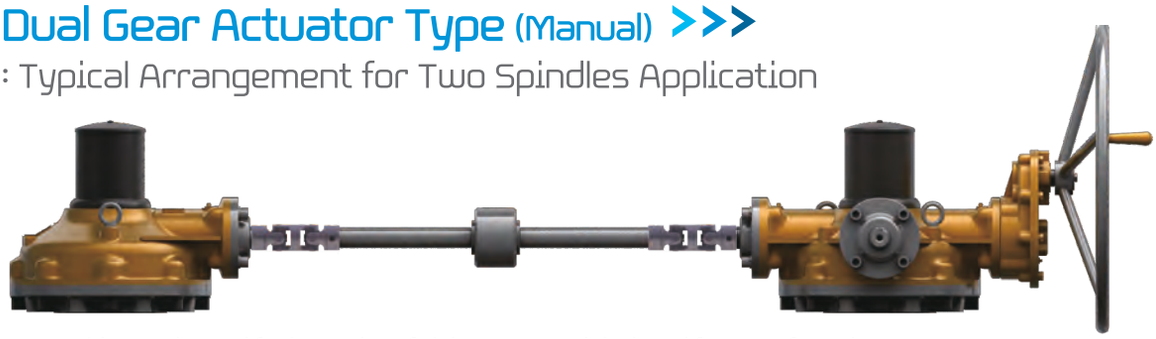

1. This type is used for large size of sluice gates and designed for manufacturing type to operate efficiently using 2 spindles.
2. Sambo can provide suitable interconnecting shafts and couplings if required. (Customer must state the center distance between the gate stems.)

Global Leader SAMBO GEAR ACTUATORS for Industrial Valves

The World's Highest Quality!

Dual Gear Actuator Type (Electric Actuators) >>>

: Typical Arrangement for Two Spindles Application

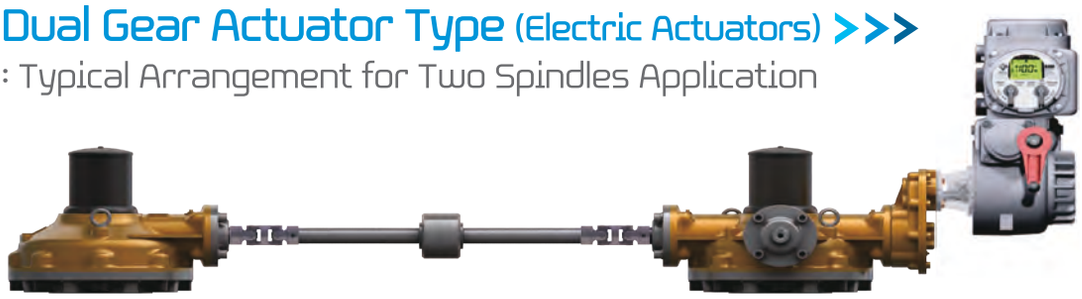

1. This type is used for large size of sluice gates and designed for manufacturing type to operate efficiently using 2 spindles.
2. Sambo can provide suitable interconnecting shafts and couplings if required. (Customer must state the center distance between the gate stems.)

Selection Chart for Manual Operation >>>

SIZE / MODEL	GEAR RATIO	MAX. STEM ACCEPTANCE		BASE MOUNTING OPTION & STANDARD	MAX. THRUST CAPACITY		MAX. TORQUE CAPACITY		WEIGHT
		TW	KEY		KN	lbf	N–m	Ft . lbf	Kg
SB–V0W–1S	6.5 : 1	46	38 (12X8)	F–10, F–12, F–14	127	28550	600	442	23
SB–V1W–1S	7 : 1	55	45 (14X9)	F–14, F–16	141	31700	980	723	29
SB–V2W–1S	10.13 : 1	62	52 (16X10)	F–14, F–16, (F–20)	190	42710	1500	1106	45
SB–V3W–1S	12.66 : 1	72	60 (18X11)	F–16, (F–20), F–25	288	64750	2500	1844	57
SB–V35W–1S	16.5 : 1	85	72 (20X12)	F–25, F–30	350	78680	3500	2581	97
SB–V4W–1S	18 : 1	98	84 (22X14)	F–25, F–30, F–35	400	89920	5200	3835	118
SB–V5W–1S	22.94 : 1	110	95 (28X16)	F–25, F–30, F–35, F–40	510	114650	7800	5753	171
SB–V55W–1S	24.5 : 1	120	105 (28X16)	F–30, F–35, F–40	1500	337210	10400	7671	223
SB–V6W–1S	28 : 1	130	115 (32X18)	F–30, F–35, F–40	2310	519300	13000	9588	291
SB–V7W–1S	30.22 : 1	150	130 (36X20)	F–35, F–40, F–48	2500	562020	17600	12981	358
SB–V75W–1S	40 : 1	160	140 (36X20)	F–40, F–48	3450	775590	21000	15489	545
SB–V8W–1S	40 : 1	180	160 (40X22)	F–40, F–48	4100	921700	32000	23602	560
SB–V85W–1S	40 : 1	190	170 (40X22)	F–48, F–60	5150	1157760	40000	29502	622
SB–V9W–1S	40 : 1	200	180 (45X25)	F–48, F–60	5450	1225180	55000	40566	855
* SB–V10W–1S	40 : 1	220	200 (50X28)	F–60, F–80	7300	1641105	75000	55317	1013

Size and component specification in this catalogue are subject to change without prior notice for quality improvement.
* Mark has been changed and updated.

STANDARD TYPE-D Multiple Input Shaft
Thrust & Torque Horizontal Input with Double Reduction Gear Attachment

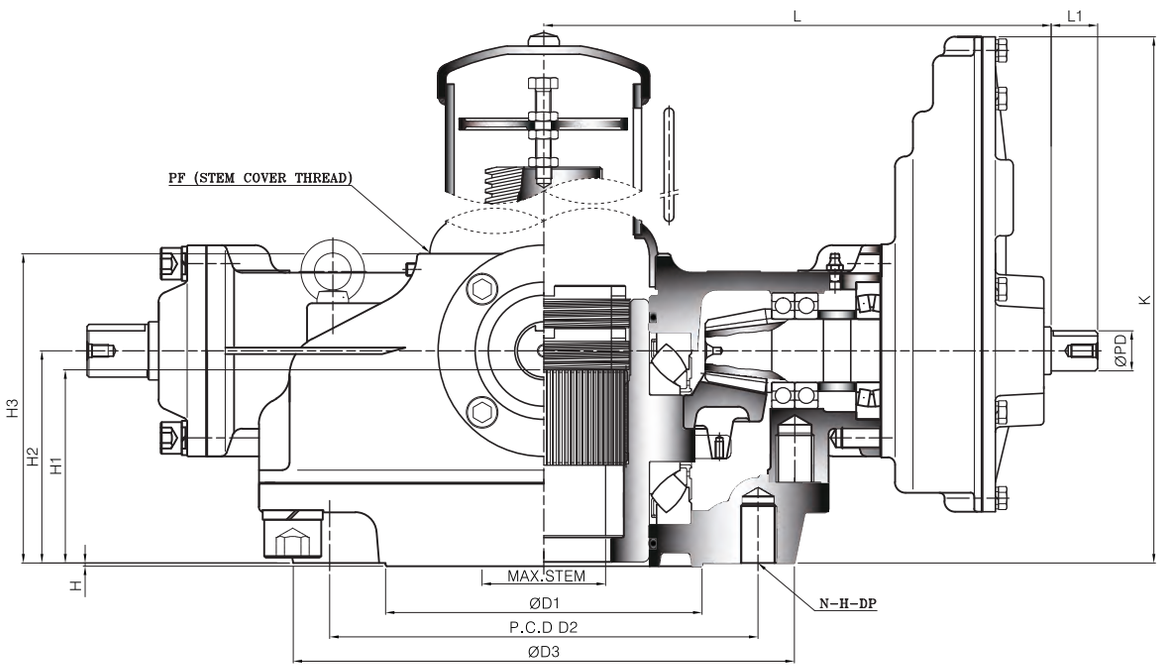

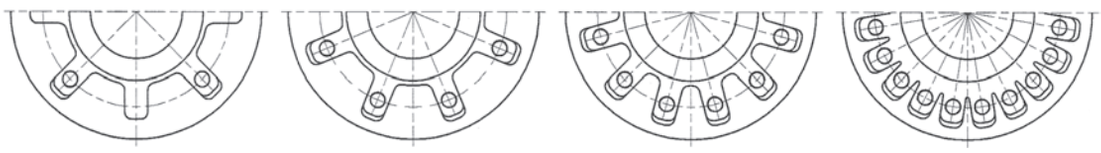

TYPE - A TYPE - B TYPE - C TYPE - D

Dimension >>>

UNIT : mm

DIM / MODEL	BASE PART							EXTERNAL PART					INPUT SHAFT PART			HAND WHEEL	STEM COVER
	TYPE	FLANGE	ØD1	P.C.D ØD2	P.C.D N-H-DP	ØD3	H	H1	H2	H3	K	L	L1	ØPD	KEY		
* SB-V0W-1SD	A	F-14	100	140	4-M16-24	175	3	72	81	121	225	231	34	26	8X7	250	PF2-1/2"
* SB-V1W-1SD		F-16	130	165	4-M20-30	210		84	98	140	242	243.5				300	PF3"
SB-V2W-1SD	B	F-16 (F-20)	140	205	8-M16-24	250	3	95	115	159.5	259	260.5	34	26	8X7	400	PF3-1/2"
SB-V3W-1SD		F-25	200	254	8-M16-24	300		102	119	166.5	263	280.5				500	PF4"
SB-V35W-1SD		F-30	230	298	8-M20-30	350		122	138	195	333	369	34	32	10X8	630	PF5"
SB-V4W-1SD		F-35	260	356	8-M30-45	410		133	150	209	345	394					PF6"
SB-V5W-1SD		F-40	300	406	8-M36-55	475		161	177	245	426	426				710	PF6"
SB-V55W-1SD		F-40	300	406	8-M36-55	475		171	192	261	441	446					
SB-V6W-1SD		F-40	300	406	8-M36-55	475		185	201	283	498.5	498	44	38	12X8	800	PF8"
SB-V7W-1SD	C	F-48	370	483	12-M36-55	560	5	206	222	309	519.5	526	44	38	12X8	900	PF8"
SB-V75W-1SD		F-48	370	483	12-M36-55	560		221	248	340	628	666	58	50	16X10	1000	PF10"
SB-V8W-1SD		F-48	370	483	12-M36-55	560		233	259	352	638	697					
SB-V85W-1SD	D	F-60	470	603	20-M36-55	700	5	248	278	373	658	741	58	50	16X10	1000	PF12"
SB-V9W-1SD		F-60	470	603	20-M36-55	700		263	295	398	784	876	58	50	16X10	1000	PF12"
* SB-V10W-1SD		F-80	670	813	20-M42-63	900		378	375	490	863	941					

Size and component specification in this catalogue are subject to change without prior notice for quality improvement.
* Mark has been changed and updated.

Dual Gear Actuator Type (Manual Dial Indicator) >>>

: Typical Arrangement for Two Spindles Application

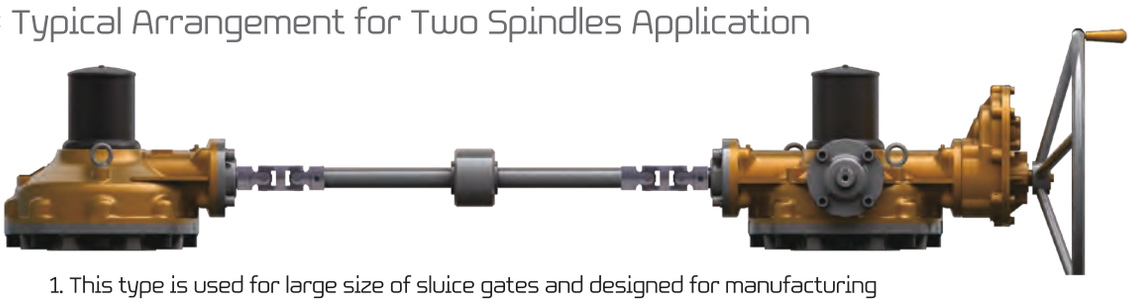

1. This type is used for large size of sluice gates and designed for manufacturing type to operate efficiently using 2 spindles.
2. Sambo can provide suitable interconnecting shafts and couplings if required. (Customer must state the center distance between the gate stems.)

Global Leader SAMBO GEAR ACTUATORS for Industrial Valves

The World's Highest Quality!

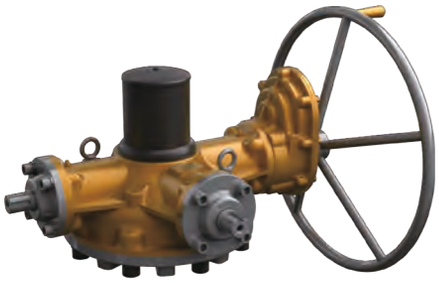

Dual Gear Actuator Type (Electric Actuators) >>>

: Typical Arrangement for Two Spindles Application

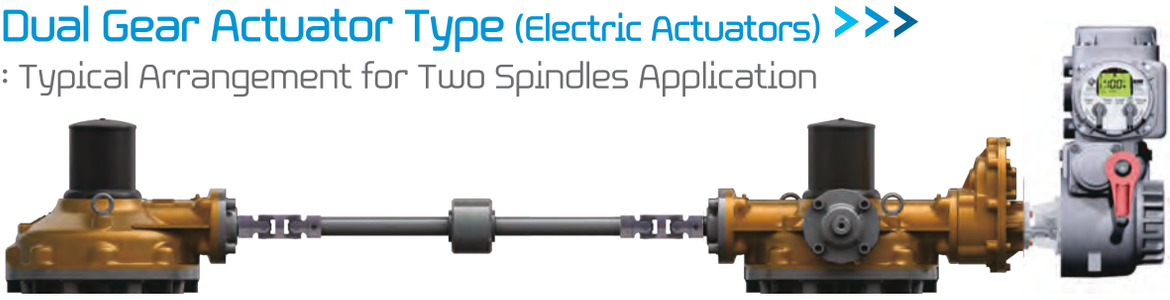

1. This type is used for large size of sluice gates and designed for manufacturing type to operate efficiently using 2 spindles.
2. Sambo can provide suitable interconnecting shafts and couplings if required. (Customer must state the center distance between the gate stems.)

Selection Chart for Manual Operation >>>

SIZE / MODEL	MAX. GEAR RATIO (Changeable)	MAX. STEM ACCEPTANCE		BASE MOUNTING OPTION & STANDARD	MAX. THRUST CAPACITY		MAX. TORQUE CAPACITY		WEIGHT
		TW	KEY		KN	lbf	N–m	Ft . lbf	Kg
* SB–V0W–1SD	20.86 : 1	46	38 (12X8)	F–10, F–12, F–14	127	28550	600	442	27
* SB–V1W–1SD	22.46 : 1	55	45 (14X9)	F–14, F–16	141	31700	980	723	33
SB–V2W–1SD	25.67 : 1	62	52 (16X10)	F–14, F–16, (F–20)	190	42710	1500	1106	46
SB–V3W–1SD	32.08 : 1	72	60 (18X11)	F–16, (F–20), F–25	288	64750	2500	1844	58
SB–V35W–1SD	49.5 : 1	85	72 (20X12)	F–25, F–30	350	78680	3500	2581	101
SB–V4W–1SD	54 : 1	98	84 (22X14)	F–25, F–30, F–35	400	89920	5200	3835	122
SB–V5W–1SD	80.31 : 1	110	95 (28X16)	F–25, F–30, F–35, F–40	510	114650	7800	5753	176
SB–V55W–1SD	85.75 : 1	120	105 (28X16)	F–30, F–35, F–40	1500	337210	10400	7671	227
SB–V6W–1SD	112 : 1	130	115 (32X18)	F–30, F–35, F–40	2310	519300	13000	9588	305
SB–V7W–1SD	120.88 : 1	150	130 (36X20)	F–35, F–40, F–48	2500	562020	17600	12981	371
SB–V75W–1SD	200 : 1	160	140 (36X20)	F–40, F–48	3450	775590	21000	15489	573
SB–V8W–1SD	200 : 1	180	160 (40X22)	F–40, F–48	4100	921700	32000	23602	588
SB–V85W–1SD	200 : 1	190	170 (40X22)	F–48, F–60	5150	1157760	40000	29502	650
SB–V9W–1SD	200 : 1	200	180 (45X25)	F–48, F–60	5450	1225180	55000	40566	893
* SB–V10W–1SD	200 : 1	220	200 (50X28)	F–60, F–80	7300	1641105	75000	55317	1051

Size and component specification in this catalogue are subject to change without prior notice for quality improvement.
* Mark has been changed and updated.

STANDARD TYPE-E

High Load Thrust & Torque Horizontal Input

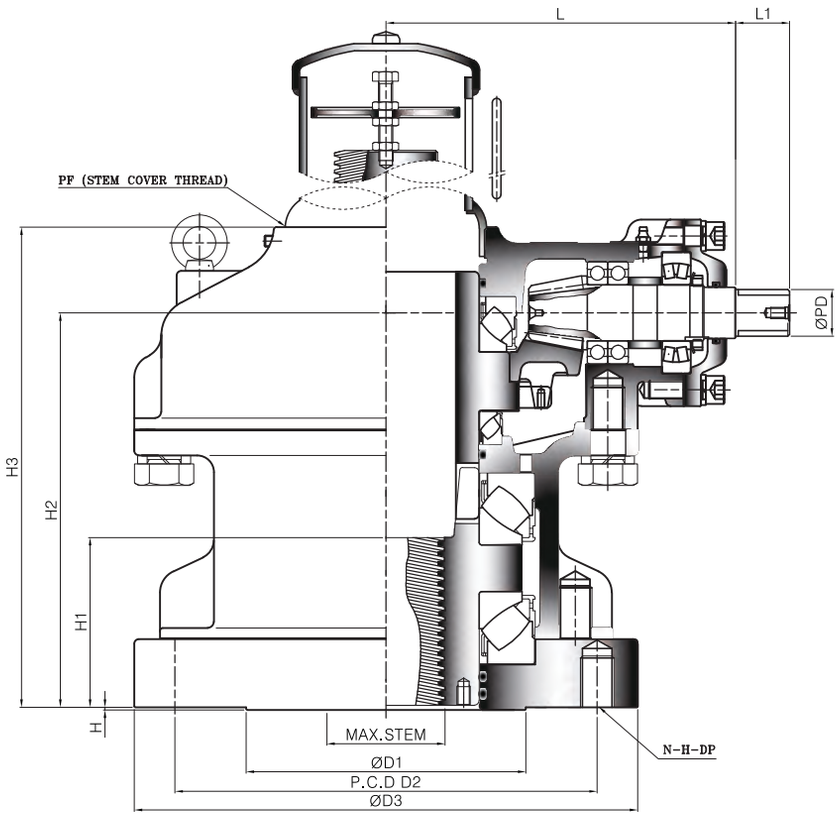

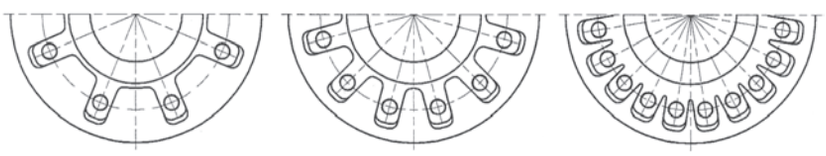

TYPE - B TYPE - C TYPE - D

Dimension >>>

UNIT : mm

DIM / MODEL	BASE PART							EXTERNAL PART				INPUT SHAFT PART			HAND WHEEL	STEM COVER
	TYPE	FLANGE	ØD1	P.C.D ØD2	P.C.D N-H-DP	ØD3	H	H1	H2	H3	L	L1	ØPD	KEY		
SB-V2H	B	F-25	200	254	8-M16-24	300	3	99	229	273.5	188	34	32	10X8	630	PF3-1/2"
SB-V3H		F-30	230	298	8-M20-30	350		118	263	310.5	208				710	PF4"
SB-V35H		F-35	260	356	8-M30-45	415		143	316	373	266	44	38	12X8	800	PF5"
SB-V4H								155	342	401	291				900	PF6"
SB-V5H		F-40	300	406	8-M36-55	475		172	376	444	313					
SB-V55H	C	F-48	370	483	12-M36-55	560	5	186	410	479	333	44	38	12X8	900	PF6"
SB-V6H		F-48	370	483	12-M36-55	560		197	429	511	381	58	50	16X10	1000	PF8"
SB-V7H		F-48						217	475	562	409					
SB-V75H	D	F-60	470	603	20-M36-55	700	5	229	505	597	441	58	50	16X10	1000	PF10"
SB-V8H		F-60	470	603	20-M36-55	700		242	540	635	472	58	50	16X10	1000	PF10"
SB-V85H		F-60						269	612	706	525					PF12"
* SB-V9H		F-80	670	813	20-M42-63	900		281	636	739	591	58	50	16X10	1000	
* SB-V10H		F-80						305	701	816	664					

Size and component specification in this catalogue are subject to change without prior notice for quality improvement.
* Mark has been changed and updated.

Disassembly flow chart of thrust bush for processing of stem thread

1. Remove base plate socket head cap screws and base plate.
2. Remove Gasket
3. Use eye-bolts from housing and thread into tapped holes on end of the drive bushing.
4. Lift drive bushing with lower roller bearing.
5. Remove roller bearing from drive bushing.
6. Thread bushing as required.
7. Add grease as necessary.
8. Re-assembly in reverse order.

Feature >>>

- This series suitable for extreme high thrust loads for use with Gate & Glove type valves. Also sluice gates and any other type requiring linear motion for high load thrust and torque applications.
- Bottom entry type stem nut. High tensile aluminum bronze material providing corrosion and abrasion resistance.
- Castings are Ductile Iron, class 65-45-12 providing high strength and impact resistance.
- Heavy duty roller bearings supporting both radial & axial thrust loads.
- Gears are Machine cut, heat treated and ground for optimum operation, Units are completely O-Ring Sealed suitable for temporary submergence to meet Ip67 class.
- Many options, such as hand wheels, chain wheels, stem covers, position dial indicators are available.

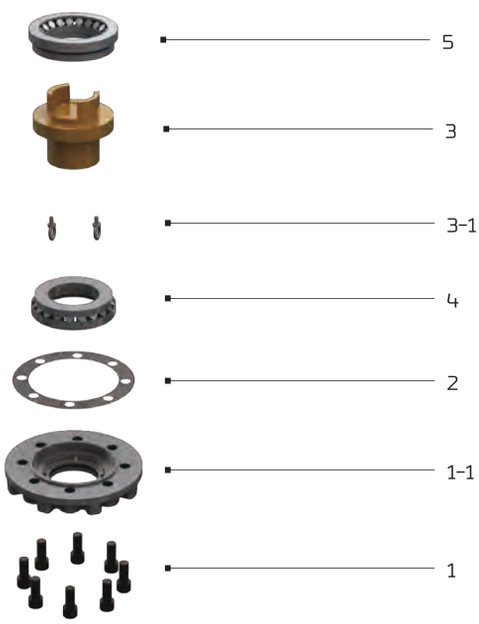

Global Leader SAMBO GEAR ACTUATORS for Industrial Valves

The World's Highest Quality!

Selection Chart for Manual Operation >>>

SIZE / MODEL	GEAR RATIO	MAX. STEM ACCEPTANCE		BASE MOUNTING OPTION & STANDARD	MAX. THRUST CAPACITY		MAX. TORQUE CAPACITY		WEIGHT
		TW	KEY		KN	lbf	N–m	Ft . lbf	Kg
SB–V2H	4 : 1	65	55 (16X10)	(F–20), F–25	1080	242800	2900	2139	62
SB–V3H	5 : 1	80	70 (20X12)	F–25, F–30	1710	384400	4500	3319	93
SB–V35H	5.5 : 1	95	85 (22X14)	F–25, F–30, F–35	2450	550800	7000	5163	158
SB–V4H	6 : 1	110	95 (25X14)		2900	651900	9800	7228	200
SB–V5H	6.56 : 1	130	115 (32X18)	F–30, F–35, F–40	3500	786800	15000	11063	264
SB–V55H	7 : 1	140	120 (32X18)	F–35, F–40, F–48	4200	944197	19000	14014	390
SB–V6H	7 : 1	150	130 (36X20)	F–35, F–40, F–48	4700	1056600	23000	16964	525
SB–V7H	7.56 : 1	170	150 (40X22)	F–48	5200	1169000	37000	27290	595
SB–V75H	8 : 1	190	170 (40X22)	F–48, F–60	6800	1528701	46000	33928	865
SB–V8H	8 : 1	215	185 (45X25)	F–48, F–60	7650	1719800	58000	42778	955
SB–V85H	8 : 1	225	195 (45X25)	F–48, F–60	9100	2045760	74000	54579	1220
* SB–V9H	8 : 1	240	215 (50X28)	F–60, F–80	9400	2113200	104000	76706	1797
* SB–V10H	8 : 1	270	240 (56X32)	F–60, F–80	11500	2585300	142000	104734	1969

Size and component specification in this catalogue are subject to change without prior notice for quality improvement.
* Mark has been changed and updated.

SAMBO

STANDARD TYPE-E

High Load Thrust & Torque Horizontal Input with Single Reduction Gear Attachment

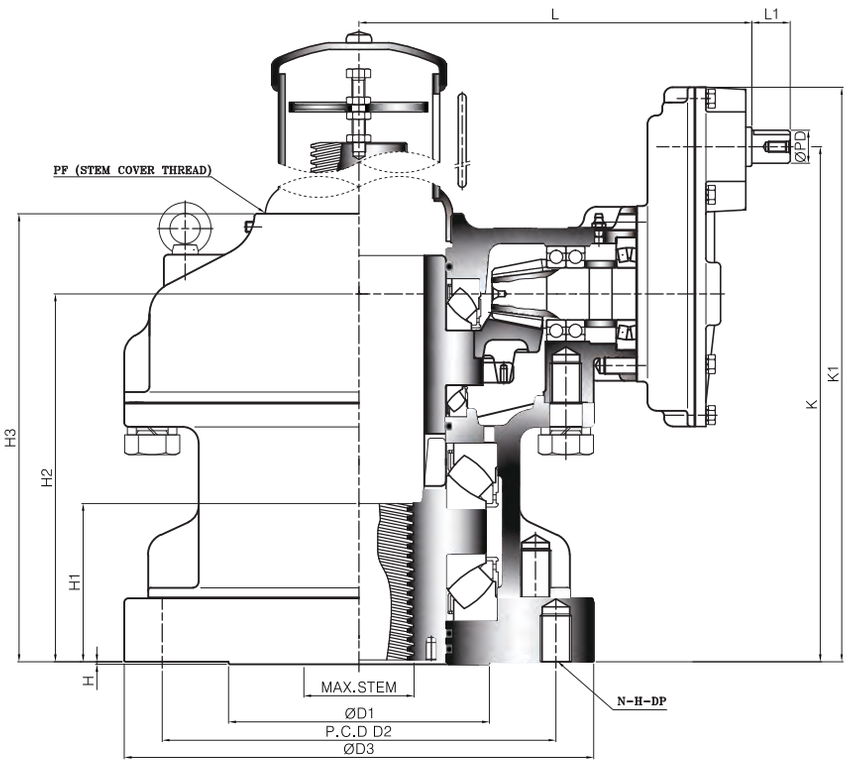

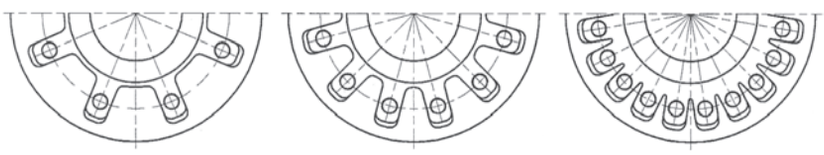

TYPE - B TYPE - C TYPE - D

Dimension >>>

UNIT : mm

DIM / MODEL	BASE PART							EXTERNAL PART						INPUT SHAFT PART			HAND WHEEL	STEM COVER
	TYPE	FLANGE	ØD1	P.C.D ØD2	P.C.D N-H-DP	ØD3	H	H1	H2	H3	K	K1	L	L1	ØPD	KEY		
SB-V2H-1S	B	F-25	200	254	8-M16-24	300	3	99	229	273.5	322	370	236.5	34	26	8X7	400	PF3-1/2"
SB-V3H-1S		F-30	230	298	8-M20-30	350		118	263	310	356	404	256.5				500	PF4"
SB-V35H-1S		F-35	260	356	8-M30-45	415		143	316	373	437	494	333	34	32	10X8	630	PF5"
SB-V4H-1S								155	342	401	463	520	358					PF6"
SB-V5H-1S		F-40	300	406	8-M36-55	475		172	376	444	521	584	387				710	
SB-V55H-1S	C	F-48	370	483	12-M36-55	560	5	186	410	479	555	617	407	34	32	10X8	800	PF6"
SB-V6H-1S		F-48	370	483	12-M36-55	560		197	429	511	598	666	472	44	38	12X8	800	PF8"
SB-V7H-1S		F-48						217	475	562	644	713	497				900	
SB-V75H-1S	D	F-60	470	603	20-M36-55	700	5	229	505	597	735	821	620	58	50	16X10	1000	PF10"
SB-V8H-1S		F-60						242	540	635	770	856	651	58	50	16X10	1000	PF10"
SB-V85H-1S		F-60						269	612	706	842	928	695					PF12"
* SB-V9H-1S		F-80	670	813	20-M42-63	900		281	636	739	920	1036	821	58	50	16X10	1000	
* SB-V10H-1S		F-80						305	701	816	985	1101	886					

Size and component specification in this catalogue are subject to change without prior notice for quality improvement.
* Mark has been changed and updated.

Disassembly flow chart of thrust bush for processing of stem thread

1. Remove base plate socket head cap screws and base plate.
2. Remove Gasket
3. Use eye-bolts from housing and thread into tapped holes on end of the drive bushing.
4. Lift drive bushing with lower roller bearing.
5. Remove roller bearing from drive bushing.
6. Thread bushing as required.
7. Add grease as necessary.
8. Re-assembly in reverse order.

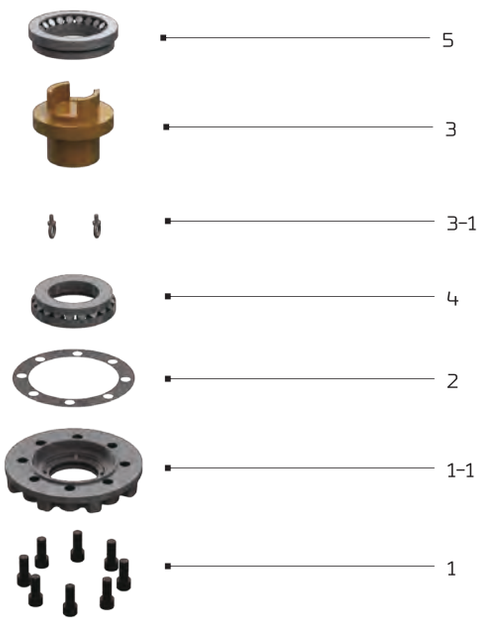

Feature >>>

- This series suitable for extreme high thrust loads for use with Gate & Glove type valves. Also sluice gates and any other type requiring linear motion for high load thrust and torque applications.
- Bottom entry type stem nut. High tensile aluminum bronze material providing corrosion and abrasion resistance.
- Castings are Ductile Iron, class 65-45-12 providing high strength and impact resistance.
- Heavy duty roller bearings supporting both radial & axial thrust loads.
- Gears are Machine cut, heat treated and ground for optimum operation, Units are completely O-Ring Sealed suitable for temporary submergence to meet Ip67 class.
- Many options, such as hand wheels, chain wheels, stem covers, position dial indicators are available.

Global Leader SAMBO GEAR ACTUATORS for Industrial Valves

The World's Highest Quality!

Selection Chart for Manual Operation >>>

SIZE / MODEL	GEAR RATIO	MAX. STEM ACCEPTANCE		BASE MOUNTING OPTION & STANDARD	MAX. THRUST CAPACITY		MAX. TORQUE CAPACITY		WEIGHT
		TW	KEY		KN	lbf	N–m	Ft . lbf	Kg
SB–V2H–1S	10.13 : 1	65	55 (16X10)	(F–20), F–25	1080	242800	2900	2139	70
SB–V3H–1S	12.66 : 1	80	70 (20X12)	F–25, F–30	1710	384400	4500	3319	101
SB–V35H–1S	16.5 : 1	95	85 (22X14)	F–25, F–30, F–35	2450	550800	7000	5163	170
SB–V4H–1S	18 : 1	110	95 (25X14)		2900	651900	9800	7228	212
SB–V5H–1S	22.94 : 1	130	115 (32X18)	F–30, F–35, F–40	3500	786800	15000	11063	276
SB–V55H–1S	24.5 : 1	140	120 (32X18)	F–35, F–40, F–48	4200	944197	19000	14014	403
SB–V6H–1S	28 : 1	150	130 (36X20)	F–35, F–40, F–48	4700	1056600	23000	16964	553
SB–V7H–1S	30.22 : 1	170	150 (40X22)	F–48	5200	1169000	37000	27290	623
SB–V75H–1S	40 : 1	190	170 (40X22)	F–48, F–60	6800	1528701	46000	33928	937
SB–V8H–1S	40 : 1	215	185 (45X25)	F–48, F–60	7650	1719800	58000	42778	1027
SB–V85H–1S	40 : 1	225	195 (45X25)	F–48, F–60	9100	2045760	74000	54579	1292
* SB–V9H–1S	40 : 1	240	215 (50X28)	F–60, F–80	9400	2113200	104000	76706	1894
* SB–V10H–1S	40 : 1	270	240 (56X32)	F–60, F–80	11500	2585300	142000	104734	2066

Size and component specification in this catalogue are subject to change without prior notice for quality improvement.
* Mark has been changed and updated.

STANDARD TYPE-E Twin Shaft

High Load Thrust & Torque (Twin Shaft) Horizontal Input with Single Reduction Gear Attachment

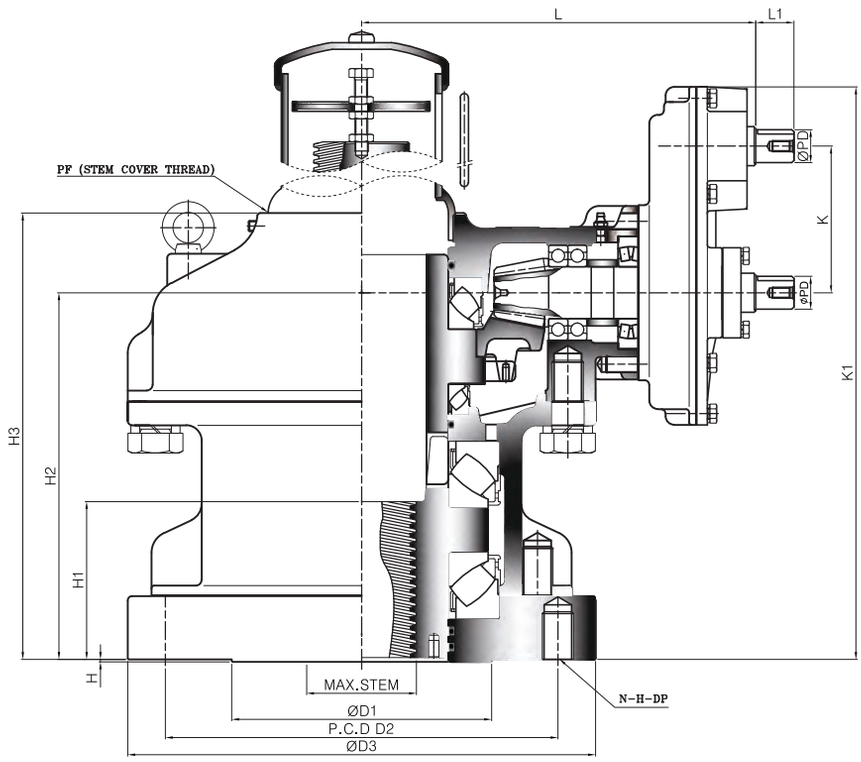

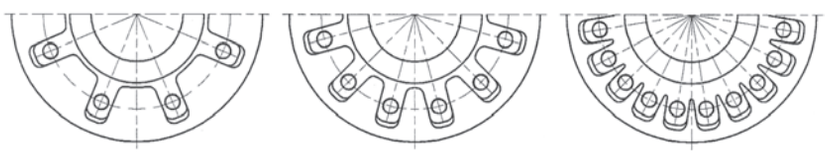

TYPE - B TYPE - C TYPE - D

Dimension >>>

UNIT : mm

MODEL \ DIM	BASE PART							EXTERNAL PART						INPUT SHAFT PART			HAND WHEEL	STEM COVER
	TYPE	FLANGE	ØD1	P.C.D ØD2	P.C.D N-H-DP	ØD3	H	H1	H2	H3	K	K1	L	L1	ØPD	KEY		
SB-V2H-1ST	B	F-25	200	254	8-M16-24	300	3	99	229	273.5	93	370	236.5	34	26	8X7	400	PF3-1/2"
SB-V3H-1ST		F-30	230	298	8-M20-30	350		118	263	310		404	256.5				500	PF4"
SB-V35H-1ST		F-35	260	356	8-M30-45	415		143	316	373	121	494	333	34	32	10X8	630	PF5"
SB-V4H-1ST								155	342	401		520	358					PF6"
SB-V5H-1ST		F-40	300	406	8-M36-55	475		172	376	444	145	584	387				710	
SB-V55H-1ST	C	F-48	370	483	12-M36-55	560	5	186	410	479	145	617	407	34	32	10X8	710	PF6"
SB-V6H-1ST		F-48	370	483	12-M36-55	560		197	429	511	169	666	472	44	38	12X8	800	PF8"
SB-V7H-1ST		F-48						217	475	562		713	497				900	
SB-V75H-1ST	D	F-60	470	603	20-M36-55	700	5	229	505	597	230	821	620	58	50	16X10	1000	PF10"
SB-V8H-1ST		F-60	470	603	20-M36-55	700		242	540	635		856	651	58	50	16X10	1000	
SB-V85H-1ST		F-60						269	612	706		928	695					PF12"
* SB-V9H-1ST		F-80	670	813	20-M42-63	900		281	636	739	284	1036	821	58	50	16X10	1000	
* SB-V10H-1ST		F-80						305	701	816		1101	886					

Size and component specification in this catalogue are subject to change without prior notice for quality improvement.
* Mark has been changed and updated.

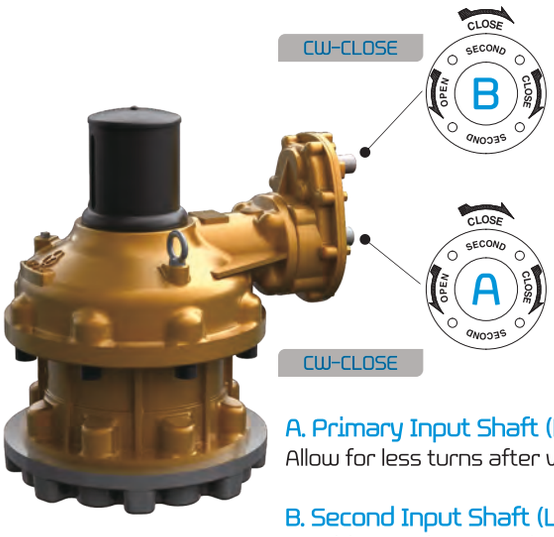

Disassembly flow chart of thrust bush for processing of stem thread

1. Remove base plate socket head cap screws and base plate.
2. Remove Gasket
3. Use eye-bolts from housing and thread into tapped holes on end of the drive bushing.
4. Lift drive bushing with lower roller bearing.
5. Remove roller bearing from drive bushing.
6. Thread bushing as required.
7. Add grease as necessary.
8. Re-assembly in reverse order.

A. Primary Input Shaft (High Speed Input Shaft)

Allow for less turns after valve has been unseating.

B. Second Input Shaft (Low Speed Input Shaft)

Provides maximum mechanical advantage for seating and unseating of valves.

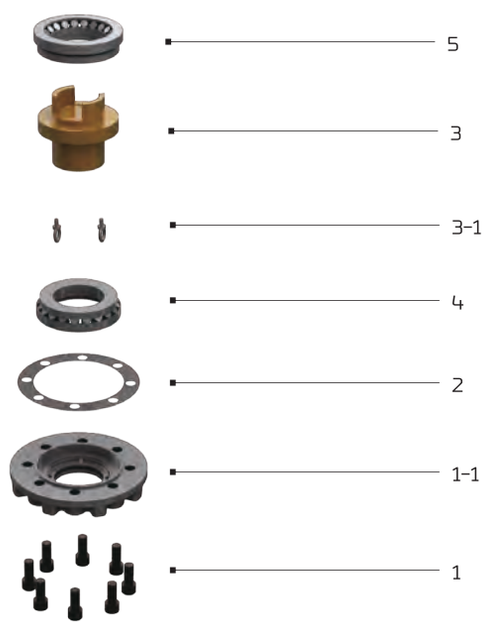

Feature >>>

- This series suitable for extreme high thrust loads for use with Gate & Glove type valves. Also sluice gates and any other type requiring linear motion for high load thrust and torque applications.
- Bottom entry type stem nut. High tensile aluminum bronze material providing corrosion and abrasion resistance.
- Castings are Ductile Iron, class 65-45-12 providing high strength and impact resistance.
- Heavy duty roller bearings supporting both radial & axial thrust loads.
- Gears are Machine cut, heat treated and ground for optimum operation, Units are completely O-Ring Sealed suitable for temporary submergence to meet Ip67 class.
- Many options, such as hand wheels, chain wheels, stem covers, position dial indicators are available.

Global Leader
SAMBO
GEAR ACTUATORS for Industrial Valves

The World's Highest Quality!

Selection Chart for Manual Operation >>>

SIZE / MODEL	GEAR RATIO		MAX. STEM ACCEPTANCE		BASE MOUNTING OPTION & STANDARD	MAX. THRUST CAPACITY		MAX. TORQUE CAPACITY		WEIGHT
	PRIMARY	SECOND	TW	KEY		KN	lbf	N-m	Ft . lbf	Kg
SB-V2H-1ST	4 : 1	10.13 : 1	65	55 (16X10)	(F-20), F-25	1080	242800	2900	2139	70
SB-V3H-1ST	5 : 1	12.66 : 1	80	70 (20X12)	F-25, F-30	1710	384400	4500	3319	101
SB-V35H-1ST	5.5 : 1	16.5 : 1	95	85 (22X14)	F-25, F-30, F-35	2450	550800	7000	5163	170
SB-V4H-1ST	6 : 1	18 : 1	110	95 (25X14)		2900	651900	9800	7228	212
SB-V5H-1ST	6.56 : 1	22.94 : 1	130	115 (32X18)	F-30, F-35, F-40	3500	786800	15000	11063	276
SB-V55H-1ST	7 : 1	24.5 : 1	140	120 (32X18)	F-35, F-40, F-48	4200	944197	19000	14014	403
SB-V6H-1ST	7 : 1	28 : 1	150	130 (36X20)	F-35, F-40, F-48	4700	1056600	23000	16964	553
SB-V7H-1ST	7.56 : 1	30.22 : 1	170	150 (40X22)	F-48	5200	1169000	37000	27290	623
SB-V75H-1ST	8 : 1	40 : 1	190	170 (40X22)	F-48, F-60	6800	1528701	46000	33928	937
SB-V8H-1ST	8 : 1	40 : 1	215	185 (45X25)	F-48, F-60	7650	1719800	58000	42778	1027
SB-V85H-1ST	8 : 1	40 : 1	225	195 (45X25)	F-48, F-60	9100	2045760	74000	54579	1292
* SB-V9H-1ST	8 : 1	40 : 1	240	215 (50X28)	F-60, F-80	9400	2113200	104000	76706	1894
* SB-V10H-1ST	8 : 1	40 : 1	270	240 (56X32)	F-60, F-80	11500	2585300	142000	104734	2066

Size and component specification in this catalogue are subject to change without prior notice for quality improvement.
* Mark has been changed and updated.

SAMBO

STANDARD TYPE-E

High Load Thrust & Torque Horizontal Input with Double Reduction Gear Attachment

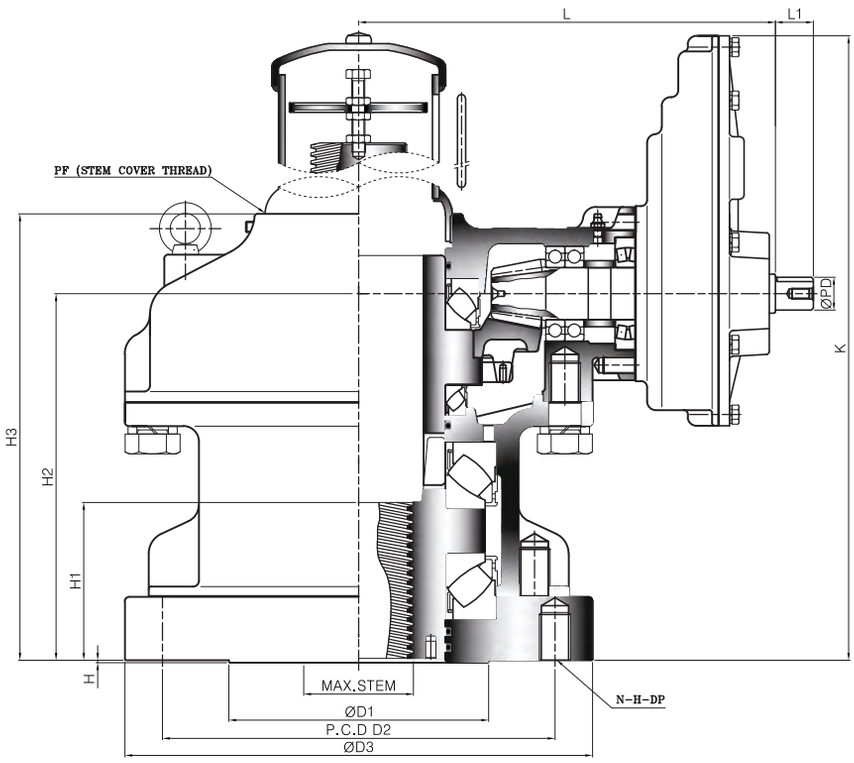

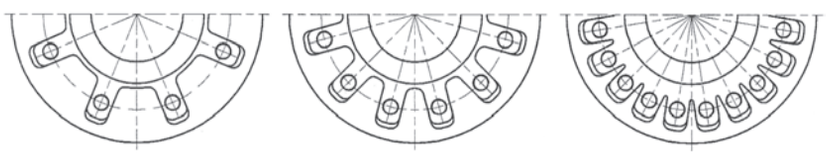

TYPE - B TYPE - C TYPE - D

Dimension >>>

UNIT : mm

MODEL \ DIM	BASE PART							EXTERNAL PART					INPUT SHAFT PART			HAND WHEEL	STEM COVER
	TYPE	FLANGE	ØD1	P.C.D ØD2	P.C.D N-H-DP	ØD3	H	H1	H2	H3	K	L	L1	ØPD	KEY		
SB-V2H-1SD	B	F-25	200	254	8-M16-24	300	3	99	229	273.5	373	260.5	34	26	8X7	400	PF3-1/2"
SB-V3H-1SD		F-30	230	298	8-M20-30	350		118	263	310	407	280.5				500	PF4"
SB-V35H-1SD		F-35	260	356	8-M30-45	415		143	316	373	511	369	34	32	10X8	630	PF5"
SB-V4H-1SD								155	342	401	537	394					PF6"
SB-V5H-1SD		F-40	300	406	8-M36-55	475		172	376	444	625	426				710	
SB-V55H-1SD	C	F-48	370	483	12-M36-55	560	5	186	410	479	659	446	34	32	10X8	800	PF6"
SB-V6H-1SD		F-48	370	483	12-M36-55	560		197	429	511	726.5	498	44	38	12X8	800	PF8"
SB-V7H-1SD		F-48						217	475	562	772.5	526				900	
SB-V75H-1SD	D	F-60	470	603	20-M36-55	700	5	229	505	597	885	666	58	50	16X10	1000	PF10"
SB-V8H-1SD		F-60	470	603	20-M36-55	700		242	540	635	920	697	58	50	16X10	1000	
SB-V85H-1SD		F-60						269	612	706	992	741					PF12"
* SB-V9H-1SD		F-80	670	813	20-M42-63	900		281	636	739	1124	876	58	50	16X10	1000	
* SB-V10H-1SD		F-80						305	701	816	1189	941					

Size and component specification in this catalogue are subject to change without prior notice for quality improvement.
* Mark has been changed and updated.

Disassembly flow chart of thrust bush for processing of stem thread

1. Remove base plate socket head cap screws and base plate.
2. Remove Gasket
3. Use eye-bolts from housing and thread into tapped holes on end of the drive bushing.
4. Lift drive bushing with lower roller bearing.
5. Remove roller bearing from drive bushing.
6. Thread bushing as required.
7. Add grease as necessary.
8. Re-assembly in reverse order.

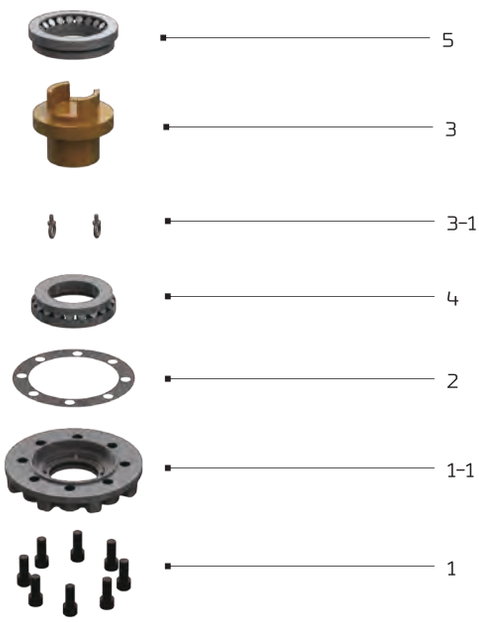

Feature >>>

- This series suitable for extreme high thrust loads for use with Gate & Glove type valves. Also sluice gates and any other type requiring linear motion for high load thrust and torque applications.
- Bottom entry type stem nut. High tensile aluminum bronze material providing corrosion and abrasion resistance.
- Castings are Ductile Iron, class 65-45-12 providing high strength and impact resistance.
- Heavy duty roller bearings supporting both radial & axial thrust loads.
- Gears are Machine cut, heat treated and ground for optimum operation, Units are completely O-Ring Sealed suitable for temporary submergence to meet Ip67 class.
- Many options, such as hand wheels, chain wheels, stem covers, position dial indicators are available.

Global Leader SAMBO GEAR ACTUATORS for Industrial Valves

The World's Highest Quality!

Selection Chart for Manual Operation >>>

SIZE / MODEL	MAX. GEAR RATIO (Changeable)	MAX. STEM ACCEPTANCE		BASE MOUNTING OPTION & STANDARD	MAX. THRUST CAPACITY		MAX. TORQUE CAPACITY		WEIGHT
		TW	KEY		KN	lbf	N–m	Ft . lbf	Kg
SB–V2H–1SD	25.67 : 1	65	55 (16X10)	(F–20), F–25	1080	242800	2900	2139	71
SB–V3H–1SD	32.08 : 1	80	70 (20X12)	F–25, F–30	1710	384400	4500	3319	102
SB–V35H–1SD	49.5 : 1	95	85 (22X14)	F–25, F–30, F–35	2450	550800	7000	5163	174
SB–V4H–1SD	54 : 1	110	95 (25X14)		2900	651900	9800	7228	216
SB–V5H–1SD	80.31 : 1	130	115 (32X18)	F–30, F–35, F–40	3500	786800	15000	11063	280
SB–V55H–1SD	85.75 : 1	140	120 (32X18)	F–35, F–40, F–48	4200	944197	19000	14014	407
SB–V6H–1SD	112 : 1	150	130 (36X20)	F–35, F–40, F–48	4700	1056600	23000	16964	566
SB–V7H–1SD	120.88 : 1	170	150 (40X22)	F–48	5200	1169000	37000	27290	636
SB–V75H–1SD	200 : 1	190	170 (40X22)	F–48, F–60	6800	1528701	46000	33928	965
SB–V8H–1SD	200 : 1	215	185 (45X25)	F–48, F–60	7650	1719800	58000	42778	1055
SB–V85H–1SD	200 : 1	225	195 (45X25)	F–48, F–60	9100	2045760	74000	54579	1320
* SB–V9H–1SD	200 : 1	240	215 (50X28)	F–60, F–80	9400	2113200	104000	76706	1932
* SB–V10H–1SD	200 : 1	270	240 (56X32)	F–60, F–80	11500	2585300	142000	104734	2104

Size and component specification in this catalogue are subject to change without prior notice for quality improvement.
* Mark has been changed and updated.

SAMBO

STANDARD TYPE-E Twin Shaft

High Load Thrust & Torque (Twin Shaft) Horizontal Input with Double Reduction Gear Attachment

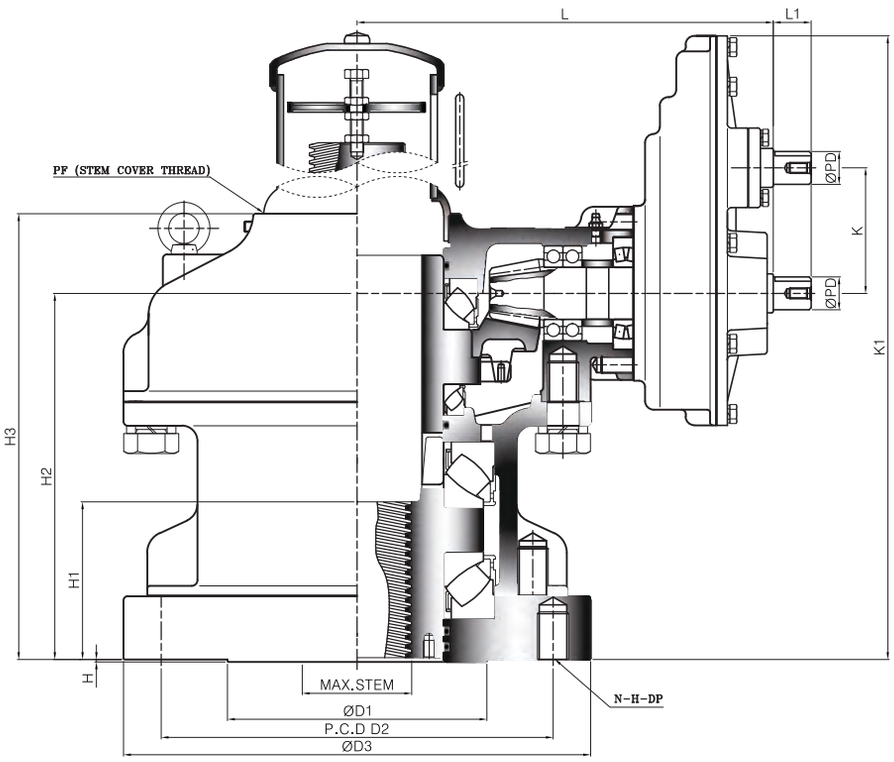

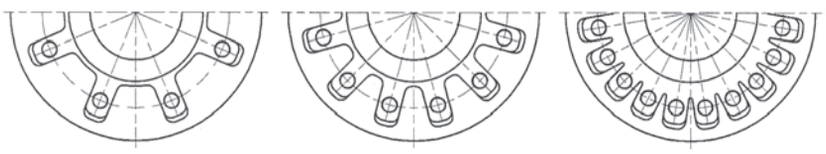

TYPE - B TYPE - C TYPE - D

Dimension >>>

UNIT : mm

MODEL \ DIM	BASE PART							EXTERNAL PART						INPUT SHAFT PART			HAND WHEEL	STEM COVER
	TYPE	FLANGE	ØD1	P.C.D ØD2	P.C.D N-H-DP	ØD3	H	H1	H2	H3	K	K1	L	L1	ØPD	KEY		
SB-V2H-1SDT	B	F-25	200	254	8-M16-24	300	3	99	229	273.5	69	373	260.5	34	26	8X7	400	PF3-1/2"
SB-V3H-1SDT		F-30	230	298	8-M20-30	350		118	263	310		407	280.5				500	PF4"
SB-V35H-1SDT		F-35	260	356	8-M30-45	415		143	316	373	93	511	369	34	32	10X8	630	PF5"
SB-V4H-1SDT								155	342	401		537	394					PF6"
SB-V5H-1SDT		F-40	300	406	8-M36-55	475		172	376	444	121	625	426				710	
SB-V55H-1SDT	C	F-48	370	483	12-M36-55	560	5	186	410	479	121	659	446	34	32	10X8	710	PF6"
SB-V6H-1SDT		F-48	370	483	12-M36-55	560		197	429	511	145	726.5	498	44	38	12X8	800	PF8"
SB-V7H-1SDT		F-48						217	475	562		772.5	526				900	
SB-V75H-1SDT	D	F-60	470	603	20-M36-55	700	5	229	505	597	186	885	666	58	50	16X10	1000	PF10"
SB-V8H-1SDT		F-60	470	603	20-M36-55	700		242	540	635		920	697	58	50	16X10	1000	
SB-V85H-1SDT		F-60						269	612	706		992	741					PF12"
* SB-V9H-1SDT		F-80	670	813	20-M42-63	900		281	636	739	238	1124	876	58	50	16X10	1000	
* SB-V10H-1SDT		F-80						305	701	816		1189	941					

Size and component specification in this catalogue are subject to change without prior notice for quality improvement.
* Mark has been changed and updated.

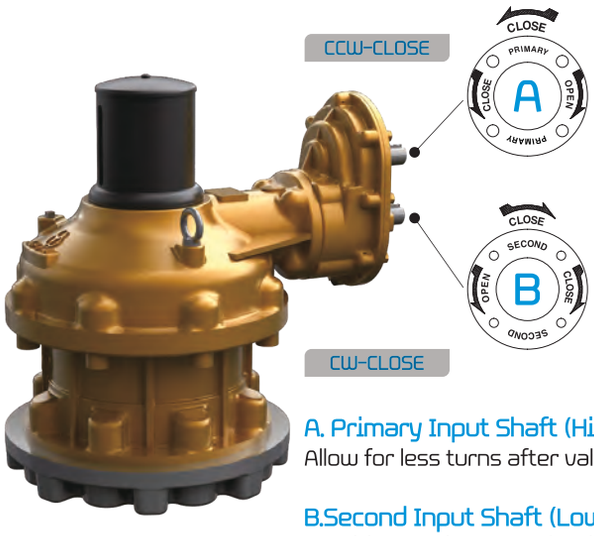

Disassembly flow chart of thrust bush for processing of stem thread

1. Remove base plate socket head cap screws and base plate.
2. Remove Gasket
3. Use eye-bolts from housing and thread into tapped holes on end of the drive bushing.
4. Lift drive bushing with lower roller bearing.
5. Remove roller bearing from drive bushing.
6. Thread bushing as required.
7. Add grease as necessary.
8. Re-assembly in reverse order.

A. Primary Input Shaft (High Speed Input Shaft)

Allow for less turns after valve has been unseating.

B.Second Input Shaft (Low Speed Input Shaft)

Provides maximum mechanical advantage for seating and unseating of valves.

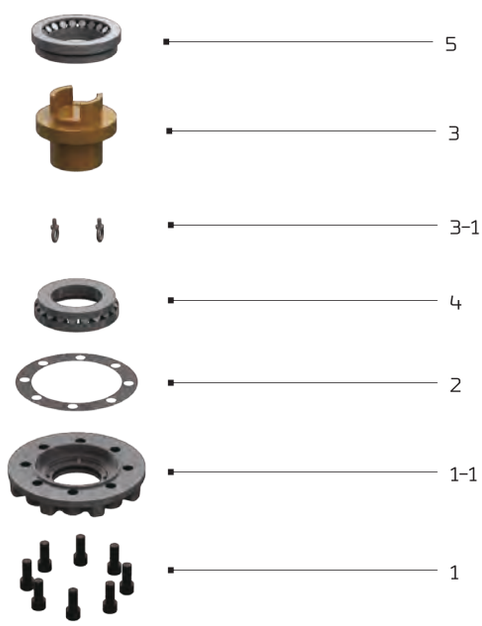

Feature >>>

- This series suitable for extreme high thrust loads for use with Gate & Glove type valves. Also sluice gates and any other type requiring linear motion for high load thrust and torque applications.
- Bottom entry type stem nut. High tensile aluminum bronze material providing corrosion and abrasion resistance.
- Castings are Ductile Iron, class 65-45-12 providing high strength and impact resistance.
- Heavy duty roller bearings supporting both radial & axial thrust loads.
- Gears are Machine cut, heat treated and ground for optimum operation, Units are completely O-Ring Sealed suitable for temporary submergence to meet Ip67 class.
- Many options, such as hand wheels, chain wheels, stem covers, position dial indicators are available.

Global Leader SAMBO GEAR ACTUATORS for Industrial Valves

The World's Highest Quality!

Selection Chart for Manual Operation >>>

SIZE / MODEL	GEAR RATIO		MAX. STEM ACCEPTANCE		BASE MOUNTING OPTION & STANDARD	MAX. THRUST CAPACITY		MAX. TORQUE CAPACITY		WEIGHT
	PRIMARY	SECOND	TW	KEY		KN	lbf	N–m	Ft . lbf	Kg
SB–V2H–1SDT	10.13 : 1	25.67 : 1	65	55 (16X10)	(F–20), F–25	1080	242800	2900	2139	71
SB–V3H–1SDT	12.66 : 1	32.08 : 1	80	70 (20X12)	F–25, F–30	1710	384400	4500	3319	102
SB–V35H–1SDT	16.5 : 1	49.5 : 1	95	85 (22X14)	F–25, F–30, F–35	2450	550800	7000	5163	174
SB–V4H–1SDT	18 : 1	54 : 1	110	95 (25X14)		2900	651900	9800	7228	216
SB–V5H–1SDT	22.94 : 1	80.31 : 1	130	115 (32X18)	F–30, F–35, F–40	3500	786800	15000	11063	280
SB–V55H–1SDT	24.5 : 1	85.75 : 1	140	120 (32X18)	F–35, F–40, F–48	4200	944197	19000	14014	407
SB–V6H–1SDT	28 : 1	112 : 1	150	130 (36X20)	F–35, F–40, F–48	4700	1056600	23000	16964	566
SB–V7H–1SDT	30.22 : 1	120.88 : 1	170	150 (40X22)	F–48	5200	1169000	37000	27290	636
SB–V75H–1SDT	40 : 1	200 : 1	190	170 (40X22)	F–48, F–60	6800	1528701	46000	33928	965
SB–V8H–1SDT	40 : 1	200 : 1	215	185 (45X25)	F–48, F–60	7650	1719800	58000	42778	1055
SB–V85H–1SDT	40 : 1	200 : 1	225	195 (45X25)	F–48, F–60	9100	2045760	74000	54579	1320
* SB–V9H–1SDT	40 : 1	200 : 1	240	215 (50X28)	F–60, F–80	9400	2113200	104000	76706	1932
* SB–V10H–1SDT	40 : 1	200 : 1	270	240 (56X32)	F–60, F–80	11500	2585300	142000	104734	2104

Size and component specification in this catalogue are subject to change without prior notice for quality improvement.
* Mark has been changed and updated.

SAMBO

STANDARD TYPE-E

High Load Thrust & Torque Vertical Input with Single Reduction Gear Attachment

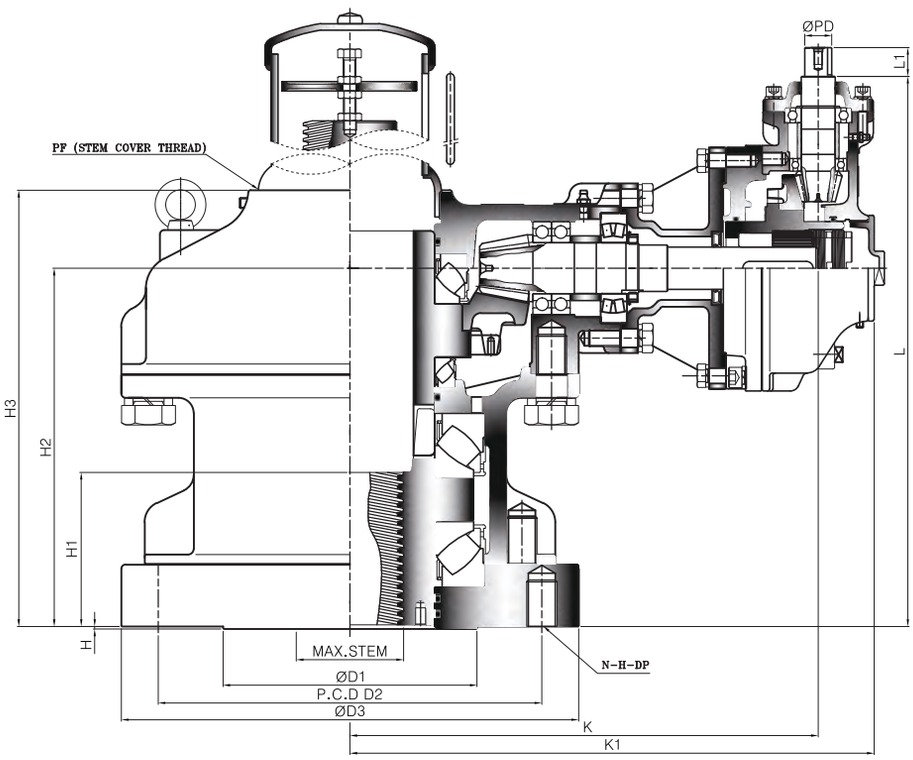

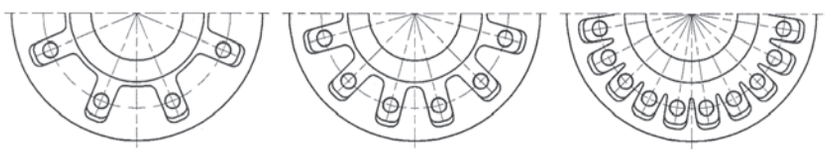

TYPE - B TYPE - C TYPE - D

Dimension >>>

UNIT : mm

MODEL \ DIM	BASE PART							EXTERNAL PART						INPUT SHAFT PART			HAND WHEEL	STEM COVER
	TYPE	FLANGE	ØD1	P.C.D ØD2	P.C.D N-H-DP	ØD3	H	H1	H2	H3	K	K1	L	L1	ØPD	KEY		
SB-V2H-2B	B	F-25	200	254	8-M16-24	300	3	99	229	273.5	299	340	350	34	26	8X7	300	PF3-1/2"
SB-V3H-2B		F-30	230	298	8-M20-30	350		118	263	310	326.5	368	394					PF4"
SB-V35H-2B		F-35	260	356	8-M30-45	415		143	316	373	415	474	470.5	34	32	10X8	400	PF5"
SB-V4H-2B								155	342	401	457	521	509				500	PF6"
SB-V5H-2B		F-40	300	406	8-M36-55	475		172	376	444	419	488.5	564				630	
SB-V55H-2B	C	F-48	370	483	12-M36-55	560	5	186	410	479	439	508.5	598	34	32	10X8	630	PF6"
SB-V6H-2B		F-48	370	483	12-M36-55	560		197	429	511	482	557.5	637				710	PF8"
SB-V7H-2B		F-48						217	475	562	510	585.5	683					
* SB-V75H-2B	D	F-60	470	603	20-M36-55	700	5	229	505	597	567	639	771	44	38	12X8	800	PF10"
SB-V8H-2B		F-60	470	603	20-M36-55	700		242	540	635	608	670	806					
SB-V85H-2B		F-60						269	612	706	654	730	903				900	PF12"
* SB-V9H-2B		F-80	670	813	20-M42-63	900		281	636	739	749	833	970					
* SB-V10H-2B		F-80						305	701	816	845	938	1076	58	50	16X10	1000	

Size and component specification in this catalogue are subject to change without prior notice for quality improvement.
* Mark has been changed and updated.

Disassembly flow chart of thrust bush for processing of stem thread

1. Remove base plate socket head cap screws and base plate.
2. Remove Gasket
3. Use eye-bolts from housing and thread into tapped holes on end of the drive bushing.
4. Lift drive bushing with lower roller bearing.
5. Remove roller bearing from drive bushing.
6. Thread bushing as required.
7. Add grease as necessary.
8. Re-assembly in reverse order.

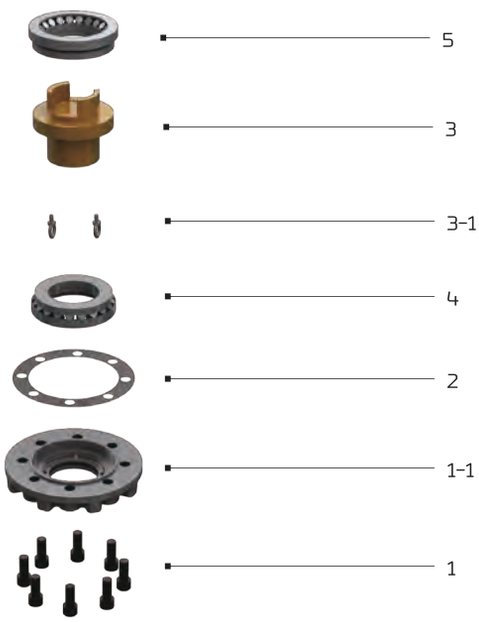

Feature >>>

- This series suitable for extreme high thrust loads for use with Gate & Glove type valves. Also sluice gates and any other type requiring linear motion for high load thrust and torque applications.
- Bottom entry type stem nut. High tensile aluminum bronze material providing corrosion and abrasion resistance.
- Castings are Ductile Iron, class 65-45-12 providing high strength and impact resistance.
- Heavy duty roller bearings supporting both radial & axial thrust loads.
- Gears are Machine cut, heat treated and ground for optimum operation, Units are completely O-Ring Sealed suitable for temporary submergence to meet Ip67 class.
- Many options, such as hand wheels, chain wheels, stem covers, position dial indicators are available.

Global Leader SAMBO GEAR ACTUATORS for Industrial Valves

The World's Highest Quality!

Selection Chart for Manual Operation >>>

SIZE / MODEL	GEAR RATIO	MAX. STEM ACCEPTANCE		BASE MOUNTING OPTION & STANDARD	MAX. THRUST CAPACITY		MAX. TORQUE CAPACITY		WEIGHT
		TW	KEY		KN	lbf	N–m	Ft . lbf	Kg
SB–V2H–2B	10 : 1	65	55 (16X10)	(F–20), F–25	1080	242800	2900	2139	71
SB–V3H–2B	15 : 1	80	70 (20X12)	F–25, F–30	1710	384400	4500	3319	105
SB–V35H–2B	17.87 : 1	95	85 (22X14)	F–25, F–30, F–35	2450	550800	7000	5163	173
SB–V4H–2B	21 : 1	110	95 (25X14)		2900	651900	9800	7228	222
SB–V5H–2B	26.22 : 1	130	115 (32X18)	F–30, F–35, F–40	3500	786800	15000	11063	297
SB–V55H–2B	28 : 1	140	120 (32X18)	F–35, F–40, F–48	4200	944197	19000	14014	424
SB–V6H–2B	35 : 1	150	130 (36X20)	F–35, F–40, F–48	4700	1056600	23000	16964	565
SB–V7H–2B	37.77 : 1	170	150 (40X22)	F–48	5200	1169000	37000	27290	635
* SB–V75H–2B	44 : 1	190	170 (40X22)	F–48, F–60	6800	1528701	46000	33928	943
SB–V8H–2B	44 : 1	215	185 (45X25)	F–48, F–60	7650	1719800	58000	42778	1032
SB–V85H–2B	48 : 1	225	195 (45X25)	F–48, F–60	9100	2045760	74000	54579	1319
* SB–V9H–2B	52.44 : 1	240	215 (50X28)	F–60, F–80	9400	2113200	104000	76706	1951
* SB–V10H–2B	56 : 1	270	240 (56X32)	F–60, F–80	11500	2585300	142000	104734	2207

Size and component specification in this catalogue are subject to change without prior notice for quality improvement.
* Mark has been changed and updated.

STANDARD TYPE-F Multiple Input Shaft
High Load Thrust & Torque Horizontal Input

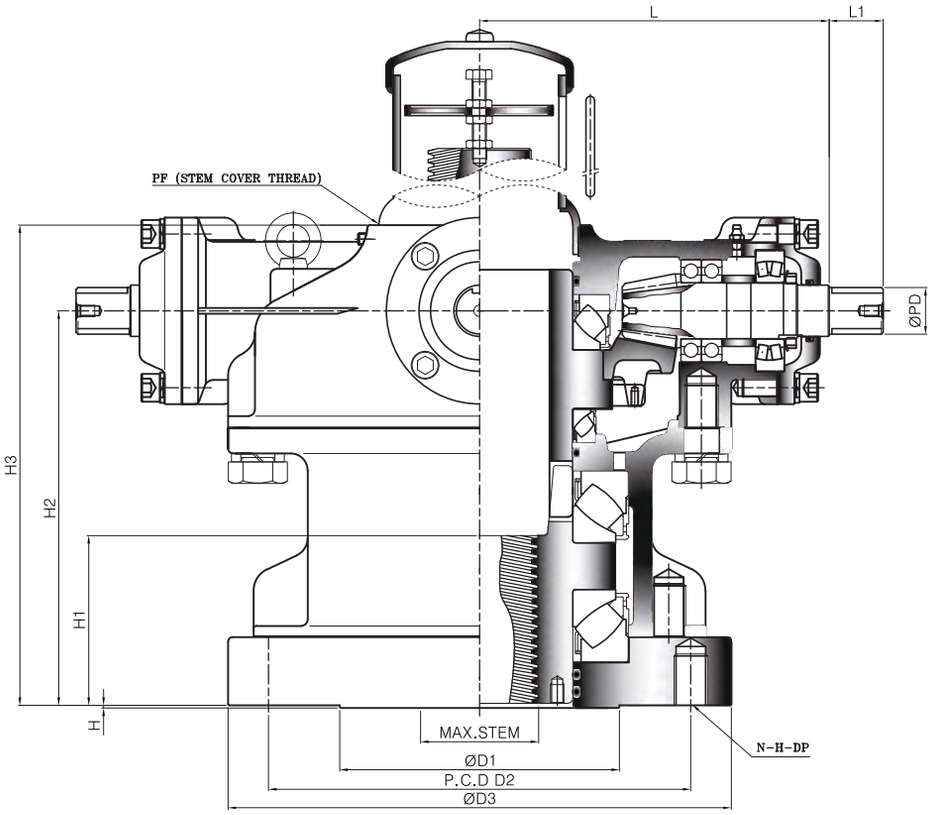

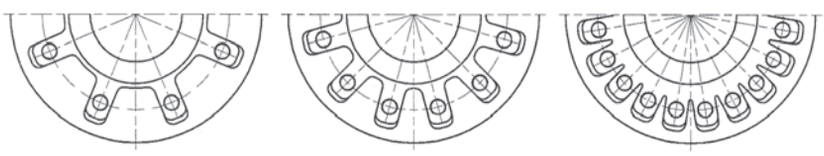

TYPE - B TYPE - C TYPE - D

Dimension >>>

UNIT : mm

DIM / MODEL	BASE PART							EXTERNAL PART				INPUT SHAFT PART			HAND WHEEL	STEM COVER
	TYPE	FLANGE	ØD1	P.C.D ØD2	P.C.D N-H-DP	ØD3	H	H1	H2	H3	L	L1	ØPD	KEY		
SB-V2HW	B	F-25	200	254	8-M16-24	300	3	99	229	273.5	188	34	32	10X8	630	PF3-1/2"
SB-V3HW		F-30	230	298	8-M20-30	350		118	263	310.5	208				710	PF4"
SB-V35HW		F-35	260	356	8-M30-45	415		143	316	373	266	44	38	12X8	800	PF5"
SB-V4HW								155	342	401	291				900	PF6"
SB-V5HW		F-40	300	406	8-M36-55	475		172	376	444	313					
SB-V55HW	C	F-48	370	483	12-M36-55	560	5	186	410	479	333	44	38	12X8	900	PF6"
SB-V6HW		F-48	370	483	12-M36-55	560		197	429	511	381	58	50	16X10	1000	PF8"
SB-V7HW		F-48						217	475	562	409					
SB-V75HW	D	F-60	470	603	20-M36-55	700	5	229	505	597	441	58	50	16X10	1000	PF10"
SB-V8HW		F-60	470	603	20-M36-55	700		242	540	635	472					
SB-V85HW		F-60						269	612	706	525					PF12"
* SB-V9HW		F-80	670	813	20-M42-63	900		281	636	739	591					
* SB-V10HW		F-80						305	701	816	664					

Size and component specification in this catalogue are subject to change without prior notice for quality improvement.
* Mark has been changed and updated.

Disassembly flow chart of thrust bush for processing of stem thread

1. Remove base plate socket head cap screws and base plate.
2. Remove Gasket
3. Use eye-bolts from housing and thread into tapped holes on end of the drive bushing.
4. Lift drive bushing with lower roller bearing.
5. Remove roller bearing from drive bushing.
6. Thread bushing as required.
7. Add grease as necessary.
8. Re-assembly in reverse order.

Feature >>>

- This series suitable for extreme high thrust loads for use with Gate & Glove type valves. Also sluice gates and any other type requiring linear motion for high load thrust and torque applications.
- Bottom entry type stem nut. High tensile aluminum bronze material providing corrosion and abrasion resistance.
- Castings are Ductile Iron, class 65-45-12 providing high strength and impact resistance.
- Heavy duty roller bearings supporting both radial & axial thrust loads.
- Gears are Machine cut, heat treated and ground for optimum operation, Units are completely O-Ring Sealed suitable for temporary submergence to meet Ip67 class.
- Many options, such as hand wheels, chain wheels, stem covers, position dial indicators are available.

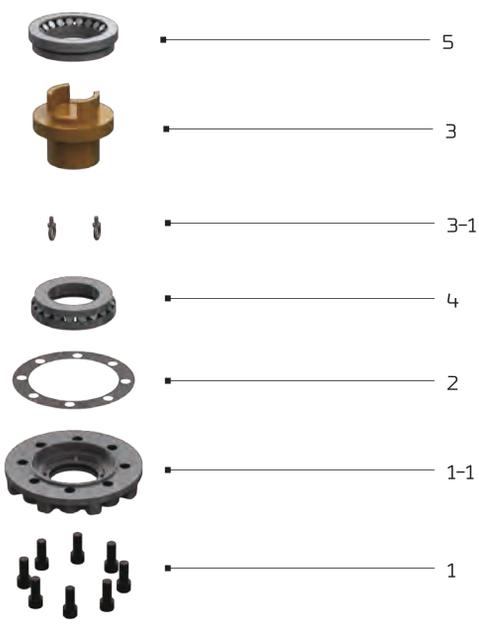

Global Leader SAMBO GEAR ACTUATORS for Industrial Valves

The World's Highest Quality!

Selection Chart for Manual Operation >>>

SIZE / MODEL	GEAR RATIO	MAX. STEM ACCEPTANCE		BASE MOUNTING OPTION & STANDARD	MAX. THRUST CAPACITY		MAX. TORQUE CAPACITY		WEIGHT
		TW	KEY		KN	lbf	N–m	Ft . lbf	Kg
SB–V2HW	4 : 1	65	55 (16X10)	(F–20), F–25	1080	242800	2900	2139	65
SB–V3HW	5 : 1	80	70 (20X12)	F–25, F–30	1710	384400	4500	3319	96
SB–V35HW	5.5 : 1	95	85 (22X14)	F–25, F–30, F–35	2450	550800	7000	5163	162
SB–V4HW	6 : 1	110	95 (25X14)		2900	651900	9800	7228	207
SB–V5HW	6.56 : 1	130	115 (32X18)	F–30, F–35, F–40	3500	786800	15000	11063	273
SB–V55HW	7 : 1	140	120 (32X18)	F–35, F–40, F–48	4200	944197	19000	14014	399
SB–V6HW	7 : 1	150	130 (36X20)	F–35, F–40, F–48	4700	1056600	23000	16964	535
SB–V7HW	7.56 : 1	170	150 (40X22)	F–48	5200	1169000	37000	27290	607
SB–V75HW	8 : 1	190	170 (40X22)	F–48, F–60	6800	1528701	46000	33928	878
SB–V8HW	8 : 1	215	185 (45X25)	F–48, F–60	7650	1719800	58000	42778	970
SB–V85HW	8 : 1	225	195 (45X25)	F–48, F–60	9100	2045760	74000	54579	1238
* SB–V9HW	8 : 1	240	215 (50X28)	F–60, F–80	9400	2113200	104000	76706	1819
* SB–V10HW	8 : 1	270	240 (56X32)	F–60, F–80	11500	2585300	142000	104734	2002

Size and component specification in this catalogue are subject to change without prior notice for quality improvement.
* Mark has been changed and updated.

STANDARD TYPE-F Multiple Input Shaft
High Load Thrust & Torque Horizontal Input with Single Reduction Gear Attachment

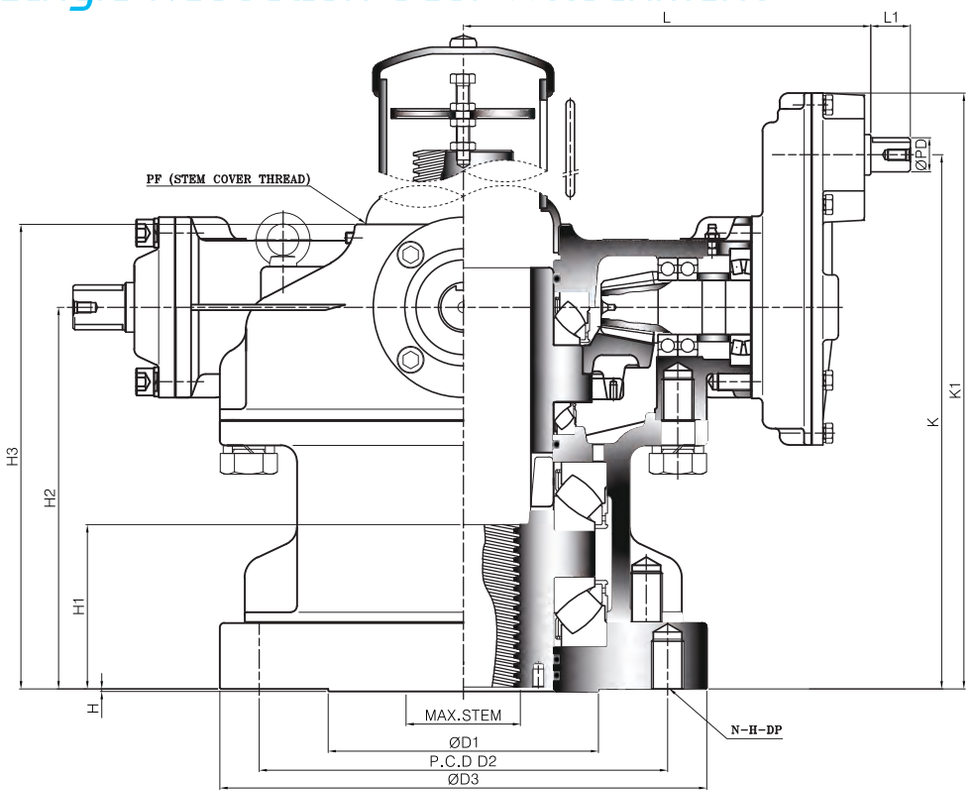

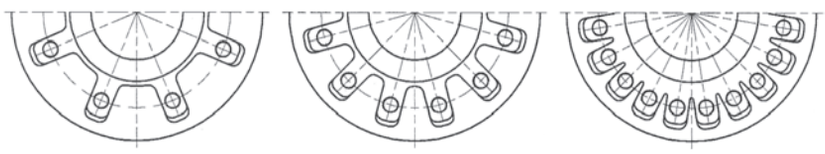

TYPE - B TYPE - C TYPE - D

Dimension >>>

UNIT : mm

DIM / MODEL	BASE PART							EXTERNAL PART						INPUT SHAFT PART			HAND WHEEL	STEM COVER
	TYPE	FLANGE	ØD1	P.C.D ØD2	P.C.D N-H-DP	ØD3	H	H1	H2	H3	K	K1	L	L1	ØPD	KEY		
SB-V2HW-1S	B	F-25	200	254	8-M16-24	300	3	99	229	273.5	322	370	236.5	34	26	8X7	400	PF3-1/2"
SB-V3HW-1S		F-30	230	298	8-M20-30	350		118	263	310	356	404	256.5				500	PF4"
SB-V35HW-1S		F-35	260	356	8-M30-45	415		143	316	373	437	494	333	34	32	10X8	630	PF5"
SB-V4HW-1S								155	342	401	463	520	358					PF6"
SB-V5HW-1S		F-40	300	406	8-M36-55	475		172	376	444	521	584	387				710	
SB-V55HW-1S	C	F-48	370	483	12-M36-55	560	5	186	410	479	555	617	407	34	32	10X8	710	PF6"
SB-V6HW-1S		F-48	370	483	12-M36-55	560		197	429	511	598	666	472	44	38	12X8	800	PF8"
SB-V7HW-1S		F-48						217	475	562	644	713	497				900	
SB-V75HW-1S	D	F-60	470	603	20-M36-55	700	5	229	505	597	735	821	620	58	50	16X10	1000	PF10"
SB-V8HW-1S								242	540	635	770	856	651					
SB-V85HW-1S		F-60						269	612	706	842	928	695					PF12"
* SB-V9HW-1S		F-80	670	813	20-M42-63	900		281	636	739	920	1036	821					
* SB-V10HW-1S		F-80						305	701	816	985	1101	886					

Size and component specification in this catalogue are subject to change without prior notice for quality improvement.
* Mark has been changed and updated.

Disassembly flow chart of thrust bush for processing of stem thread

1. Remove base plate socket head cap screws and base plate.
2. Remove Gasket
3. Use eye-bolts from housing and thread into tapped holes on end of the drive bushing.
4. Lift drive bushing with lower roller bearing.
5. Remove roller bearing from drive bushing.
6. Thread bushing as required.
7. Add grease as necessary.
8. Re-assembly in reverse order.

Feature >>>

- This series suitable for extreme high thrust loads for use with Gate & Glove type valves. Also sluice gates and any other type requiring linear motion for high load thrust and torque applications.
- Bottom entry type stem nut. High tensile aluminum bronze material providing corrosion and abrasion resistance.
- Castings are Ductile Iron, class 65-45-12 providing high strength and impact resistance.
- Heavy duty roller bearings supporting both radial & axial thrust loads.
- Gears are Machine cut, heat treated and ground for optimum operation, Units are completely O-Ring Sealed suitable for temporary submergence to meet Ip67 class.
- Many options, such as hand wheels, chain wheels, stem covers, position dial indicators are available.

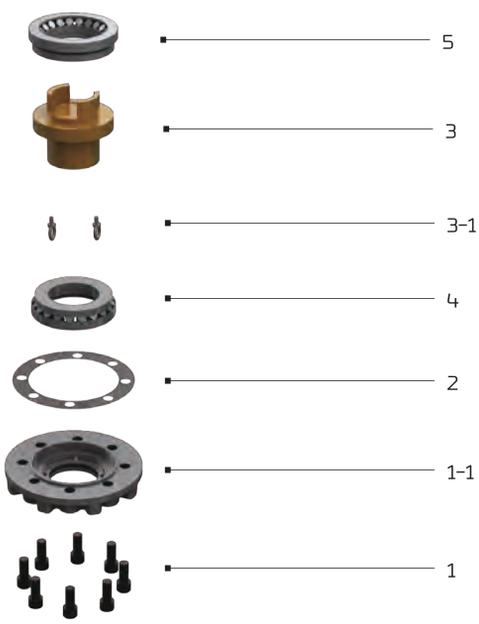

Global Leader SAMBO GEAR ACTUATORS for Industrial Valves

The World's Highest Quality!

Selection Chart for Manual Operation >>>

SIZE / MODEL	GEAR RATIO	MAX. STEM ACCEPTANCE		BASE MOUNTING OPTION & STANDARD	MAX. THRUST CAPACITY		MAX. TORQUE CAPACITY		WEIGHT
		TW	KEY		KN	lbf	N–m	Ft . lbf	Kg
SB–V2HW–1S	10.13 : 1	65	55 (16X10)	(F–20), F–25	1080	242800	2900	2139	73
SB–V3HW–1S	12.66 : 1	80	70 (20X12)	F–25, F–30	1710	384400	4500	3319	104
SB–V35HW–1S	16.5 : 1	95	85 (22X14)	F–25, F–30, F–35	2450	550800	7000	5163	174
SB–V4HW–1S	18 : 1	110	95 (25X14)		2900	651900	9800	7228	219
SB–V5HW–1S	22.94 : 1	130	115 (32X18)	F–30, F–35, F–40	3500	786800	15000	11063	285
SB–V55HW–1S	24.5 : 1	140	120 (32X18)	F–35, F–40, F–48	4200	944197	19000	14014	412
SB–V6HW–1S	28 : 1	150	130 (36X20)	F–35, F–40, F–48	4700	1056600	23000	16964	563
SB–V7HW–1S	30.22 : 1	170	150 (40X22)	F–48	5200	1169000	37000	27290	635
SB–V75HW–1S	40 : 1	190	170 (40X22)	F–48, F–60	6800	1528701	46000	33928	950
SB–V8HW–1S	40 : 1	215	185 (45X25)	F–48, F–60	7650	1719800	58000	42778	1042
SB–V85HW–1S	40 : 1	225	195 (45X25)	F–48, F–60	9100	2045760	74000	54579	1310
* SB–V9HW–1S	40 : 1	240	215 (50X28)	F–60, F–80	9400	2113200	104000	76706	1916
* SB–V10HW–1S	40 : 1	270	240 (56X32)	F–60, F–80	11500	2585300	142000	104734	2099

Size and component specification in this catalogue are subject to change without prior notice for quality improvement.
* Mark has been changed and updated.

STANDARD TYPE-F Multiple Input Shaft

High Load Thrust & Torque Horizontal Input with Double Reduction Gear Attachment

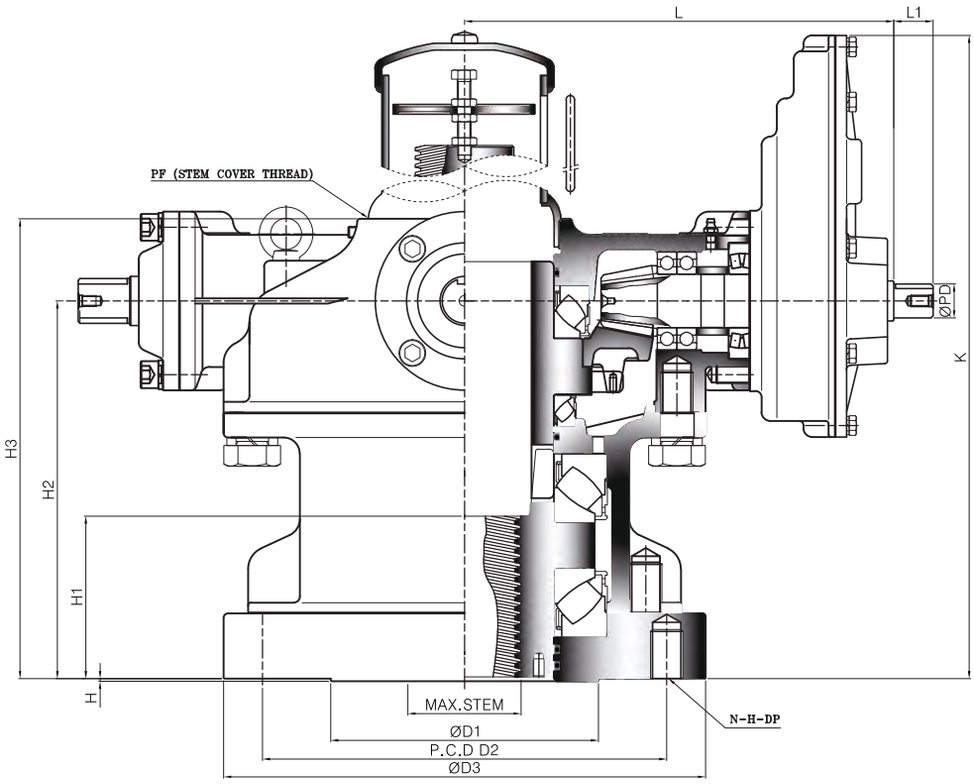

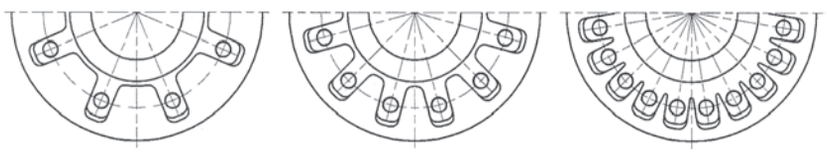

TYPE - B TYPE - C TYPE - D

Dimension >>>

UNIT : mm

DIM / MODEL	BASE PART							EXTERNAL PART					INPUT SHAFT PART			HAND WHEEL	STEM COVER
	TYPE	FLANGE	ØD1	P.C.D ØD2	P.C.D N-H-DP	ØD3	H	H1	H2	H3	K	L	L1	ØPD	KEY		
SB-V2HW-1SD	B	F-25	200	254	8-M16-24	300	3	99	229	273.5	373	260.5	34	26	8X7	400	PF3-1/2"
SB-V3HW-1SD		F-30	230	298	8-M20-30	350		118	263	310	407	280.5				500	PF4"
SB-V35HW-1SD		F-35	260	356	8-M30-45	415		143	316	373	511	369	34	32	10X8	630	PF5"
SB-V4HW-1SD								155	342	401	537	394					PF6"
SB-V5HW-1SD		F-40	300	406	8-M36-55	475		172	376	444	625	426				710	
SB-V55HW-1SD	C	F-48	370	483	12-M36-55	560	5	186	410	479	659	446	34	32	10X8	710	PF6"
SB-V6HW-1SD		F-48	370	483	12-M36-55	560		197	429	511	726.5	498	44	38	12X8	800	PF8"
SB-V7HW-1SD		F-48						217	475	562	772.5	526				900	
SB-V75HW-1SD	D	F-60	470	603	20-M36-55	700	5	229	505	597	885	666	58	50	16X10	1000	PF10"
SB-V8HW-1SD		F-60	470	603	20-M36-55	700		242	540	635	920	697					
SB-V85HW-1SD		F-60						269	612	706	992	741					PF12"
* SB-V9HW-1SD		F-80	670	813	20-M42-63	900		281	636	739	1124	876					
* SB-V10HW-1SD		F-80						305	701	816	1189	941					

Size and component specification in this catalogue are subject to change without prior notice for quality improvement.
* Mark has been changed and updated.

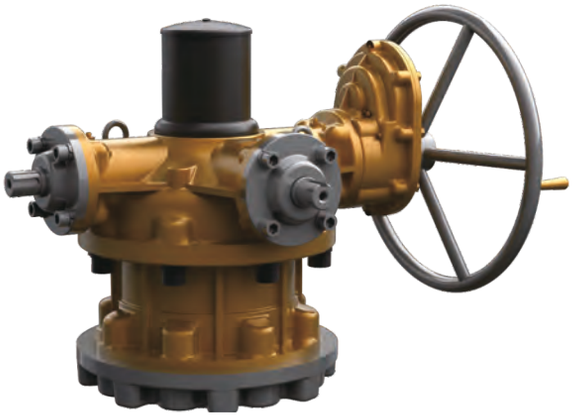

Disassembly flow chart of thrust bush for processing of stem thread

1. Remove base plate socket head cap screws and base plate.
2. Remove Gasket
3. Use eye-bolts from housing and thread into tapped holes on end of the drive bushing.
4. Lift drive bushing with lower roller bearing.
5. Remove roller bearing from drive bushing.
6. Thread bushing as required.
7. Add grease as necessary.
8. Re-assembly in reverse order.

Feature >>>

- This series suitable for extreme high thrust loads for use with Gate & Glove type valves. Also sluice gates and any other type requiring linear motion for high load thrust and torque applications.
- Bottom entry type stem nut. High tensile aluminum bronze material providing corrosion and abrasion resistance.
- Castings are Ductile Iron, class 65-45-12 providing high strength and impact resistance.
- Heavy duty roller bearings supporting both radial & axial thrust loads.
- Gears are Machine cut, heat treated and ground for optimum operation, Units are completely O-Ring Sealed suitable for temporary submergence to meet Ip67 class.
- Many options, such as hand wheels, chain wheels, stem covers, position dial indicators are available.

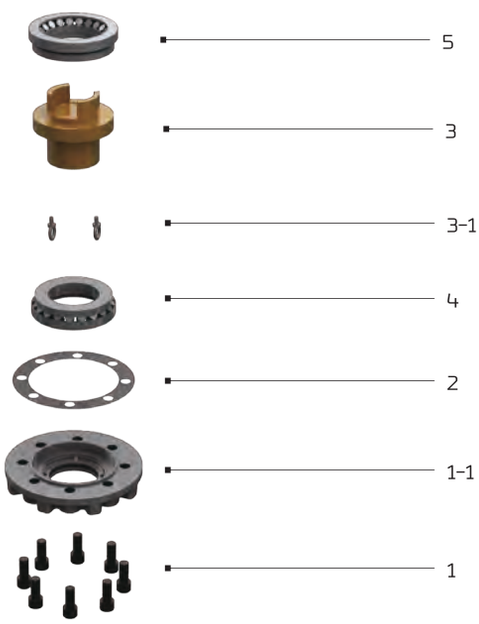

Global Leader SAMBO GEAR ACTUATORS for Industrial Valves

The World's Highest Quality!

Selection Chart for Manual Operation >>>

SIZE / MODEL	MAX. GEAR RATIO (Changeable)	MAX. STEM ACCEPTANCE		BASE MOUNTING OPTION & STANDARD	MAX. THRUST CAPACITY		MAX. TORQUE CAPACITY		WEIGHT
		TW	KEY		KN	lbf	N–m	Ft . lbf	Kg
SB–V2HW–1SD	25.67 : 1	65	55 (16X10)	(F–20), F–25	1080	242800	2900	2139	74
SB–V3HW–1SD	32.08 : 1	80	70 (20X12)	F–25, F–30	1710	384400	4500	3319	105
SB–V35HW–1SD	49.5 : 1	95	85 (22X14)	F–25, F–30, F–35	2450	550800	7000	5163	178
SB–V4HW–1SD	54 : 1	110	95 (25X14)		2900	651900	9800	7228	223
SB–V5HW–1SD	80.31 : 1	130	115 (32X18)	F–30, F–35, F–40	3500	786800	15000	11063	289
SB–V55HW–1SD	85.75 : 1	140	120 (32X18)	F–35, F–40, F–48	4200	944197	19000	14014	416
SB–V6HW–1SD	112 : 1	150	130 (36X20)	F–35, F–40, F–48	4700	1056600	23000	16964	576
SB–V7HW–1SD	120.88 : 1	170	150 (40X22)	F–48	5200	1169000	37000	27290	648
SB–V75HW–1SD	200 : 1	190	170 (40X22)	F–48, F–60	6800	1528701	46000	33928	978
SB–V8HW–1SD	200 : 1	215	185 (45X25)	F–48, F–60	7650	1719800	58000	42778	1070
SB–V85HW–1SD	200 : 1	225	195 (45X25)	F–48, F–60	9100	2045760	74000	54579	1338
* SB–V9HW–1SD	200 : 1	240	215 (50X28)	F–60, F–80	9400	2113200	104000	76706	1954
* SB–V10HW–1SD	200 : 1	270	240 (56X32)	F–60, F–80	11500	2585300	142000	104734	2137

Size and component specification in this catalogue are subject to change without prior notice for quality improvement.
* Mark has been changed and updated.

STANDARD TYPE-F Multiple Input Shaft
High Load Thrust & Torque Vertical Input with Single Reduction Gear Attachment

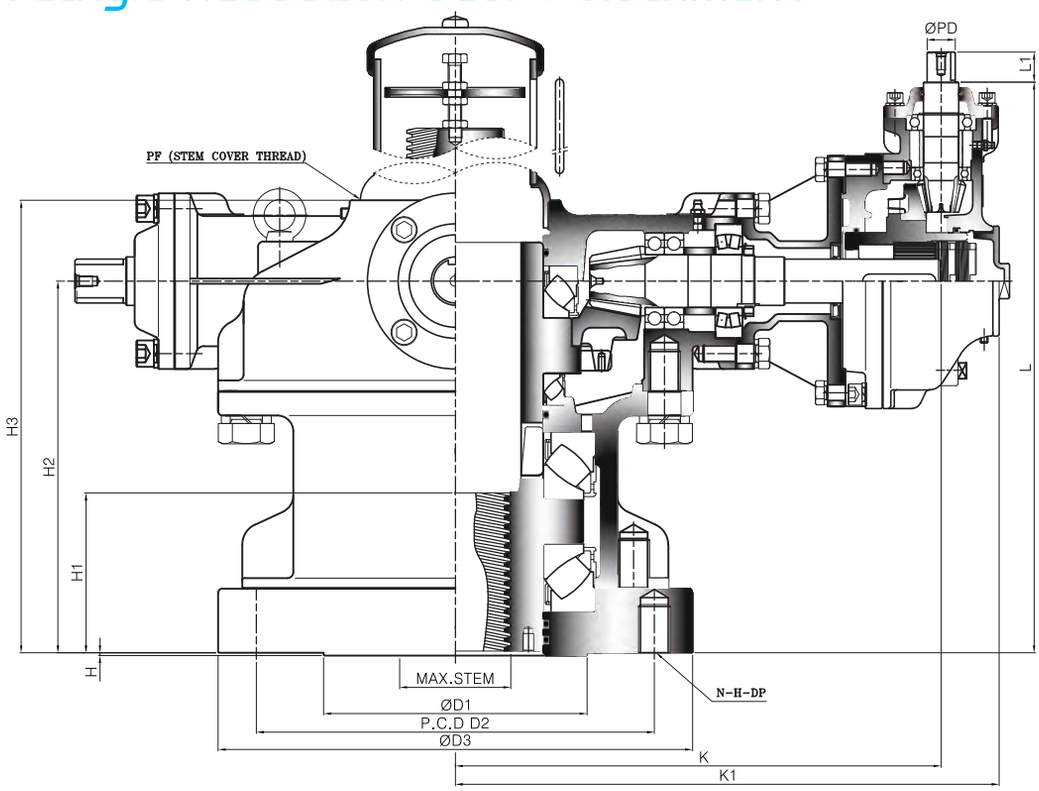

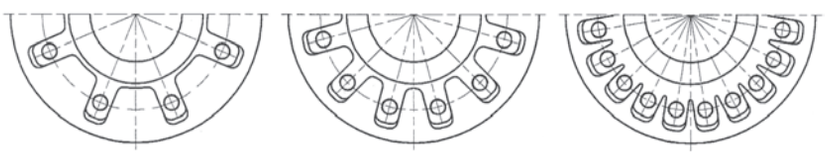

TYPE - B TYPE - C TYPE - D

Dimension >>>

UNIT : mm

DIM / MODEL	BASE PART							EXTERNAL PART						INPUT SHAFT PART			HAND WHEEL	STEM COVER
	TYPE	FLANGE	ØD1	P.C.D ØD2	P.C.D N-H-DP	ØD3	H	H1	H2	H3	K	K1	L	L1	ØPD	KEY		
SB-V2HW-2B	B	F-25	200	254	8-M16-24	300	3	99	229	273.5	299	340	350	34	26	8X7	300	PF3-1/2"
SB-V3HW-2B		F-30	230	298	8-M20-30	350		118	263	310	326.5	368	394					PF4"
SB-V35HW-2B		F-35	260	356	8-M30-45	415		143	316	373	415	474	470.5	34	32	10X8	400	PF5"
SB-V4HW-2B								155	342	401	457	521	509				500	PF6"
SB-V5HW-2B		F-40	300	406	8-M36-55	475		172	376	444	419	488.5	564				630	
SB-V55HW-2B	C	F-48	370	483	12-M36-55	560	5	186	410	479	439	508.5	598	34	32	10X8	630	PF6"
SB-V6HW-2B		F-48	370	483	12-M36-55	560		197	429	511	482	557.5	637				710	PF8"
SB-V7HW-2B		F-48						217	475	562	510	585.5	683					
* SB-V75HW-2B	D	F-60	470	603	20-M36-55	700	5	229	505	597	567	639	771	44	38	12X8	800	PF10"
SB-V8HW-2B		F-60	470	603	20-M36-55	700		242	540	635	608	670	806					
SB-V85HW-2B		F-60						269	612	706	654	730	903				900	PF12"
* SB-V9HW-2B		F-80	670	813	20-M42-63	900		281	636	739	749	833	970					
* SB-V10HW-2B		F-80						305	701	816	845	938	1076	58	50	16X10	1000	

Size and component specification in this catalogue are subject to change without prior notice for quality improvement.
* Mark has been changed and updated.

Disassembly flow chart of thrust bush for processing of stem thread

1. Remove base plate socket head cap screws and base plate.
2. Remove Gasket
3. Use eye-bolts from housing and thread into tapped holes on end of the drive bushing.
4. Lift drive bushing with lower roller bearing.
5. Remove roller bearing from drive bushing.
6. Thread bushing as required.
7. Add grease as necessary.
8. Re-assembly in reverse order.

Feature >>>

- This series suitable for extreme high thrust loads for use with Gate & Glove type valves. Also sluice gates and any other type requiring linear motion for high load thrust and torque applications.
- Bottom entry type stem nut. High tensile aluminum bronze material providing corrosion and abrasion resistance.
- Castings are Ductile Iron, class 65-45-12 providing high strength and impact resistance.
- Heavy duty roller bearings supporting both radial & axial thrust loads.
- Gears are Machine cut, heat treated and ground for optimum operation, Units are completely O-Ring Sealed suitable for temporary submergence to meet Ip67 class.
- Many options, such as hand wheels, chain wheels, stem covers, position dial indicators are available.

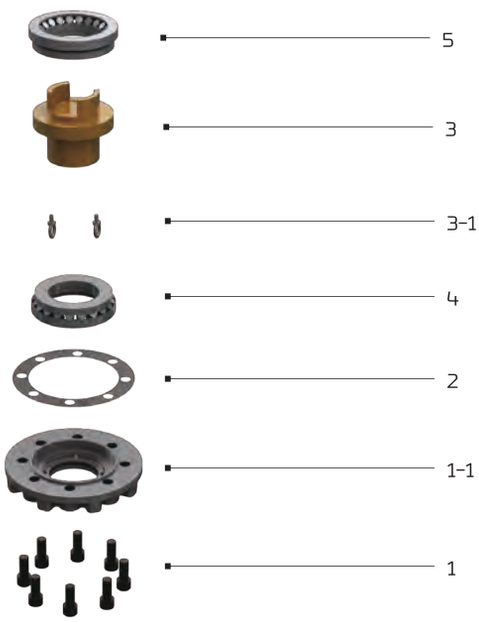

Global Leader SAMBO GEAR ACTUATORS for Industrial Valves

The World's Highest Quality!

Selection Chart for Manual Operation >>>

SIZE / MODEL	GEAR RATIO	MAX. STEM ACCEPTANCE		BASE MOUNTING OPTION & STANDARD	MAX. THRUST CAPACITY		MAX. TORQUE CAPACITY		WEIGHT
		TW	KEY		KN	lbf	N–m	Ft . lbf	Kg
SB–V2HW–2B	10 : 1	65	55 (16X10)	(F–20), F–25	1080	242800	2900	2139	74
SB–V3HW–2B	15 : 1	80	70 (20X12)	F–25, F–30	1710	384400	4500	3319	108
SB–V35HW–2B	17.87 : 1	95	85 (22X14)	F–25, F–30, F–35	2450	550800	7000	5163	177
SB–V4HW–2B	21 : 1	110	95 (25X14)		2900	651900	9800	7228	229
SB–V5HW–2B	26.22 : 1	130	115 (32X18)	F–30, F–35, F–40	3500	786800	15000	11063	321
SB–V55HW–2B	35 : 1	140	120 (32X18)	F–35, F–40, F–48	4200	944197	19000	14014	433
SB–V6HW–2B	35 : 1	150	130 (36X20)	F–35, F–40, F–48	4700	1056600	23000	16964	575
SB–V7HW–2B	37.77 : 1	170	150 (40X22)	F–48	5200	1169000	37000	27290	647
* SB–V75HW–2B	44 : 1	190	170 (40X22)	F–48, F–60	6800	1528701	46000	33928	956
SB–V8HW–2B	44 : 1	215	185 (45X25)	F–48, F–60	7650	1719800	58000	42778	1047
SB–V85HW–2B	48 : 1	225	195 (45X25)	F–48, F–60	9100	2045760	74000	54579	1337
* SB–V9HW–2B	52.44 : 1	240	215 (50X28)	F–60, F–80	9400	2113200	104000	76706	1973
* SB–V10HW–2B	56 : 1	270	240 (56X32)	F–60, F–80	11500	2585300	142000	104734	2240

Size and component specification in this catalogue are subject to change without prior notice for quality improvement.
* Mark has been changed and updated.